Workshop Manual

Polo 1995 ➤

Direct injection and glow plug system with distributor pump as of 10.99									
Engine ID	AGD	AKU	ASX						

Edition 06.2007

Protected by copyright. Copying for private or commercial purposes, in part or in whole, is not permitted unless authorised by Volkswagen AG. Volkswagen AG does not guarantee or accept any liability with respect to the correctness of information in this document. Copyright by Volkswagen AG.

satelettronica

List of Workshop Manual Repair Groups

Repair Group

01 - Self-diagnosis

23 - Mixture preparation - injection

28 - Glow plug system

Protected by copyright. Copying for private or commercial purposes, in part or in whole, is not permitted unless authorised by Volkswagen AG. Volkswagen AG does not guarantee or accept any liability with respect to the correctness of information in this document. Copyright by Volkswagen AG.

satelettronica

Technical information should always be available to the foremen and mechanics, because their careful and constant adherence to the instructions is essential to ensure vehicle road-worthiness and safety. In addition, the normal basic safety precautions for working on motor vehicles must, as a matter of course, be observed.

All rights reserved.
No reproduction without prior agreement from publisher.

Copyright © 2015 Volkswagen AG, Wolfsburg

00050207320

Protected by copyright. Copying for private or commercial purposes, in part or in whole, is not permitted unless authorised by Volkswagen AG. Volkswagen AG does not guarantee or accept any liability with respect to the correctness of information in this document. Copyright by Volkswagen AG.

Contents

01 - Self-diagnosis 1

1	**Self-diagnosis**	**1**
1.1	Features of self-diagnosis	1
1.2	Technical data of self-diagnosis	1
1.3	Connecting fault reader V.A.G 1551 and selecting engine electronics control unit	2
1.4	Connecting vehicle diagnosis, testing and information system VAS 5051 and selecting engine electronics control unit	5
1.5	Read fault memory	7
1.6	Clear fault memory	8
2	**Fault table**	**10**
3	**Final control diagnosis**	**23**
3.1	Performing final control diagnosis	23
4	**Measured value blocks**	**27**
4.1	Safety precautions	27
4.2	Read measured value block	27
4.3	Evaluating measured value blocks	29

23 - Mixture preparation - injection 43

1	**Repairing diesel direct injection system**	**43**
1.1	Safety precautions	43
1.2	Rules for cleanliness	43
1.3	Fitting locations overview	44
1.4	Repairing injection pump	46
1.5	Removing and installing inlet connection	47
1.6	Removing and installing injection pump	48
1.7	Dynamically checking and adjusting commencement of injection	55
1.8	Checking timing	57
1.9	Removing and installing injectors	60
1.10	Checking injectors	61
1.11	Sealing injection pump	62
2	**Checking components and functions**	**68**
2.1	Checking voltage supply for diesel direct injection system	68
2.2	Checking engine speed sender G28	68
2.3	Checking coolant temperature sender G62	70
2.4	Checking intake manifold temperature sender G72	72
2.5	Checking fuel temperature sender G81	74
2.6	Checking modulating piston movement sender G149 and metering adjuster N146	76
2.7	Checking needle lift sender G80	79
2.8	Checking injection timing device control range	80
2.9	Checking intake manifold flap change-over	82
2.10	Checking variable intake manifold flap change-over valve N239	83
3	**Checking additional signals**	**86**
3.1	Checking speed signal	86
3.2	Checking signal from brake light switch F and brake pedal switch F47	88
3.3	Checking signal from clutch pedal switch F36	90
3.4	Checking speed signal	92
3.5	Checking data bus	93
4	**Renewing, coding and matching engine control unit**	**94**
4.1	Renewing engine control unit	94
4.2	Coding engine control unit	94
4.3	Adapting engine control unit to electronic immobilizer	95

satelettronica

28 - Glow plug system 97
1 Checking glow plug system 97
1.1 Checking glow plugs 98

Protected by copyright. Copying for private or commercial purposes, in part or in whole, is not permitted unless authorised by Volkswagen AG. Volkswagen AG does not guarantee or accept any liability with respect to the correctness of information in this document. Copyright by Volkswagen AG.

satelettronica

01 – Self-diagnosis

1 Self-diagnosis

1.1 Features of self-diagnosis

The diesel direct injection system control unit -J248- is equipped with a fault memory.

If faults occur in the sensors and components being monitored, they will be stored in the fault memory together with an indication of the type of fault.

Faults which occur temporarily (sporadically), are printed out with the addendum “sporadic fault”. These faults are indicated on display by the addendum “/SP”. The cause of sporadic faults can be e.g. a loose contact or a temporarily open circuit. If a sporadic fault does not occur again within 50 engine starts, it will be cleared from the fault memory.

If faults are recognised which affect the driving behaviour, the glow period warning lamp flashes.

The stored faults can be read out with the fault reader -V.A.G 1551- , the vehicle system tester -V.A.G 1552- or the vehicle diagnosis, testing and information system -VAS 5051- ⇒ page 7 .

The fault memory must be erased after the faults have been eliminated ⇒ page 8.

Note

General information on self-diagnosis can be found in the instruction manuals for the fault reader -V.A.G 1551- and the vehicle system tester -V.A.G 1552- .

1.2 Technical data of self-diagnosis

1.2.1 Technical data

- Data transfer between control unit and fault reader -V.A.G 1551- or vehicle system tester -V.A.G 1552- is carried out in “rapid data transfer” operating mode.
- Fault memory: Non-volatile memory and volatile memory[1)]

1) Will be cancelled after 50th engine start if fault has not occurred again.

1.2.2 Read control unit version

The control unit version is displayed when the fault reader -V.A.G 1551- or the vehicle system tester -V.A.G 1552- is connected and engine electronics control unit is selected ⇒ page 2 .

Protected by copyright. Copying for private or commercial purposes, in part or in whole, is only permitted where authorised by Volkswagen AG. Volkswagen AG does not guarantee or accept any liability with respect to the correctness of information in this document. Copyright by Volkswagen AG.
satelettronica

1.2.3 Selectable functions on use of the fault reader -V.A.G 1551- or vehicle system tester -V.A.G 1552- or vehicle diagnosis, testing and information system - VAS 5051-

The prerequisites for selecting the desired functions can be determined from the following table.

Function		Prerequisite		
Functions on the fault reader -V.A.G 1551- or vehicle system tester -V.A.G 1552-		**Engine stationary, ignition switched on**	**Engine running at idling speed**	**Vehicle being driven**
01	Read control unit version	yes	yes	yes
02	Read fault memory	yes[2)]	yes	yes
03	Final control diagnosis	yes	yes	no
04	Basic setting	no	yes	no
05	Clear fault memory	yes	yes	yes
06	End output	yes	yes	yes
07	Code control unit	yes	no	no
08	Read measured value block	yes	yes	yes

2) Only carry out with ignition switched on, when engine does not start.

1.3 Connecting fault reader -V.A.G 1551- and selecting engine electronics control unit

Special tools and workshop equipment required

- Fault reader -V.A.G 1551-

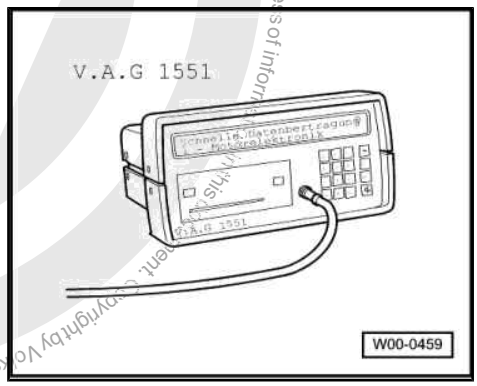

- Diagnosis cable -V.A.G 1551/3-

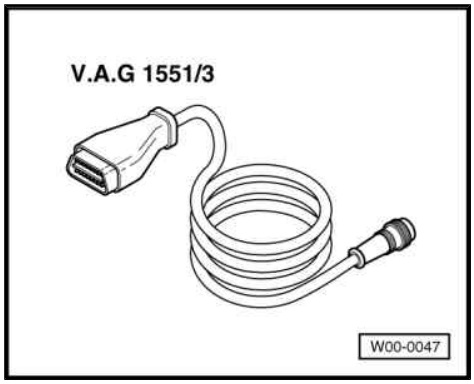

Protected by copyright. Copying for private or commercial purposes, in part or in whole is not permitted unless authorised by Volkswagen AG. Volkswagen AG does not guarantee or accept any liability with respect to the correctness of information. Copyright by Volkswagen AG.
satelettronica

Note

- *The vehicle system tester -V.A.G 1552- can be used instead of the fault reader -V.A.G 1551- , however a print-out is not possible.*
- *All fault reader -V.A.G 1551- and vehicle system tester -V.A.G 1552- functions can also be carried out with the vehicle diagnosis, testing and information system -VAS 5051- . Connect vehicle diagnosis, testing and information system -VAS 5051-* *⇒ page 5* .

Test prerequisites

- Fuses No. 15, 23, 24, 32 and 37 must be OK.
- Strip fuses in fuse box/battery OK.
- The battery voltage must be at least 11.5 V.
- Earth connections between engine and body must be OK.
- All electrical consumers, e.g. lights and rear window heating, must be switched off.

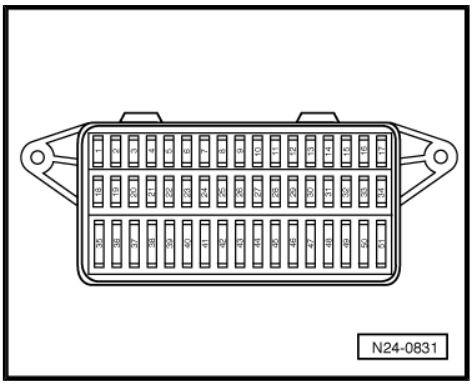

Procedure

Protected by copyright. Copyright by Volkswagen AG.
Copyright by Volkswagen AG. Volkswagen AG does not guarantee or accept any liability with respect to the correctness of information in this document.
Copying for private or commercial purposes, in part or in whole, is not permitted unless authorised by Volkswagen AG.
satelettronica

– Remove ashtray -1-.

– Connect fault reader -V.A.G 1551- with diagnosis cable -V.A.G 1551/3- .

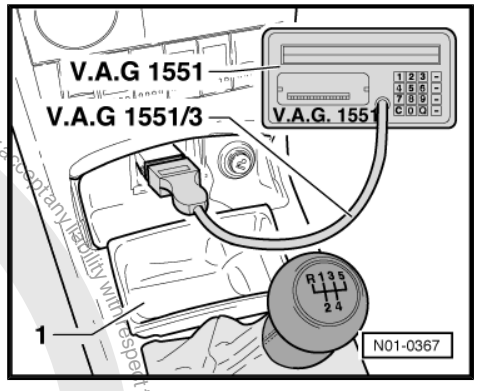

After the fault reader -V.A.G 1551- has been connected:

– Depending upon desired function: Switch ignition on or start engine ⇒ page 2 , table “Selectable functions”.

Note

- *If the display remains blank, check voltage supply for diagnostic connector: ⇒ Current flow diagrams, Electrical fault finding and Fitting locations*
- *If the display does not indicate as described in the work sequence:⇒ Fault reader -V.A.G 1551- operating instructions*
- *If due to an input fault “Fault in the data transfer!” is displayed, pull cable off fault reader -V.A.G 1551- , reconnect and repeat work step.*

Indicated on display:

```
V.A.G SELF-DIAGNOSIS                HELP
 1 - Rapid data transfer*
```

Indicated on display:

```
V.A.G SELF-DIAGNOSIS                HELP
 2 - Flash code output*
```

3) Appears alternately

– Operate fault reader -V.A.G 1551- taking into account the information on the display:

– Press key 1 for “Rapid data transfer”.

– Press keys 0 and 1 for address word “Engine electronics” and confirm the input with Q key.

The fault reader -V.A.G 1551- display will show the control unit identification, e.g.:

```
038906012AS  1.7l  R4  EDC  00SG 2536 ->
Coding 00002                 WSC 0000
```

- 038906012AS = Part No. of the control unit (for up-to-date control unit version see parts catalogue)
- 1.7 l = engine displacement
- R4 = type of engine (4-cyl. in-line engine)
- EDC = Injection system (Electronic Diesel Control)
- SG = type of gearbox: Manual gearbox
- 2536 = Control unit software version
- Coding 00002 = control unit coding, coding variants of engine control unit ⇒ page 94 .
- WSC xxxxx = Workshop code from fault reader -V.A.G 1551- with which coding was last carried out. (If the factory coding has not been changed, WSC 00000 appears)

– Press → key.

Protected by copyright. Copying for private or commercial purposes, in part or in whole, is not permitted unless authorised by Volkswagen AG. Volkswagen AG does not guarantee or accept any liability with respect to the correctness of information in this document. Copyright by Volkswagen AG.
satelettronica

Protected by copyright. Copying for private or commercial purposes, in part or in whole, is not permitted unless authorised by Volkswagen AG. Volkswagen AG does not guarantee or accept any liability with respect to the correctness of information in this document. Copyright by Volkswagen AG.

Indicated on display:

```
Rapid data transfer                HELP
Select function XX
```

– Further measures see repair procedures.

1.4 Connecting vehicle diagnosis, testing and information system -VAS 5051- and selecting engine electronics control unit

All functions previously carried out with the fault reader -V.A.G 1551- and vehicle system tester -V.A.G 1552- can also be carried out with the vehicle diagnosis, testing and information system -VAS 5051- in vehicle self-diagnosis mode: ⇒ Operating instructions for vehicle diagnosis, testing and information system -VAS 5051- .

Special tools and workshop equipment required

♦ Vehicle diagnosis, testing and information system -VAS 5051-

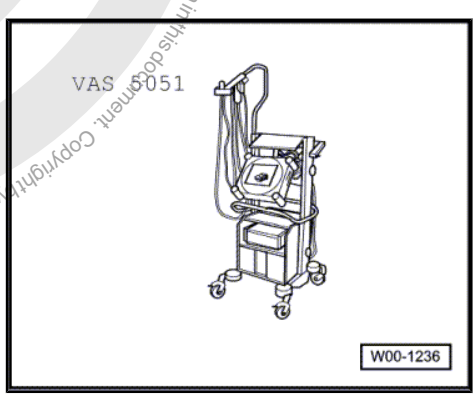

Test prerequisites

- Fuses No. 15, 23, 24, 32 and 37 must be OK.
- The battery voltage must be at least 11.5 V.
- Earth connections between engine and body must be OK.
- All electrical consumers, e.g. lights and rear window heating, must be switched off.

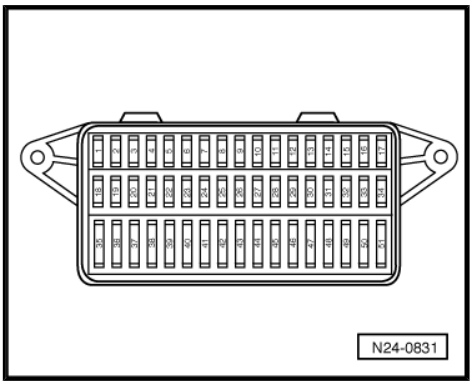

Procedure

– Connect vehicle diagnosis, testing and information system -VAS 5051- with diagnosis cable, 5m -VAS 5051/1- or diagnosis cable for LT2 -VAS 5051/3- as follows:

satelettronica

– Remove ashtray -1-.

– Connect diagnosis cable connector on to diagnosis connection.

– Depending upon desired function: Switch ignition on or start engine ⇒ page 2 , table “Selectable functions”.

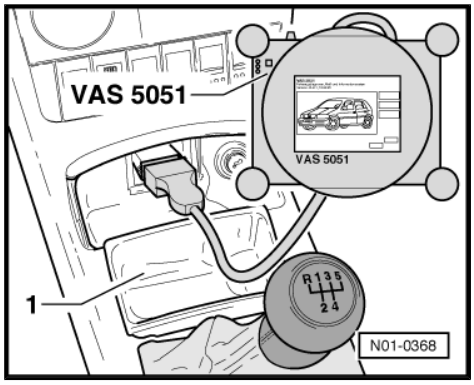

Note

- *The display fields will be displayed from top to bottom in functions 04 - Basic settings or 08 - Read data block.*
- *If the display does not indicate as described in the work sequence:⇒ Operating instructions for vehicle diagnosis, testing and information system -VAS 5051- .*

Indicated on display:

Select operating mode:

– Press key on display for “Vehicle self-diagnosis” -arrow-.

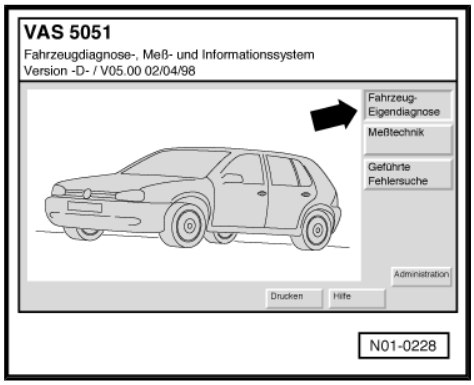

Indicated on display:

Select vehicle system:

– Press “01 - Engine electronics” on the display -arrow-.

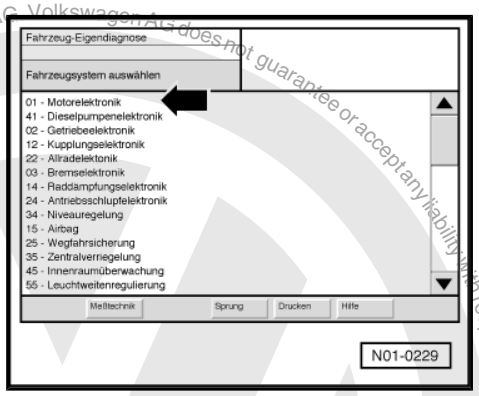

On the display the control unit identification and coding are displayed, e.g.:

If the coding differs from the vehicle version, then:

– Check control unit coding ⇒ page 94 , Coding engine control unit.

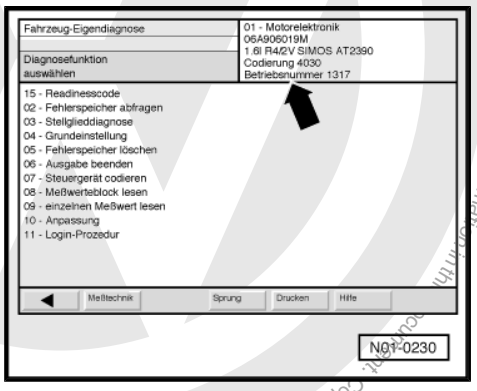

Protected by copyright. Copying for private or commercial purposes, in part or in whole, is not permitted unless authorised by Volkswagen AG. Volkswagen AG does not guarantee or accept any liability with respect to the correctness of information. Copyright by Volkswagen AG.
satelettronica

Indicated on display:

Select diagnostic function:

At this point all diagnostic functions are available.

– Press the desired function on the display.

– Further measures see repair procedures.

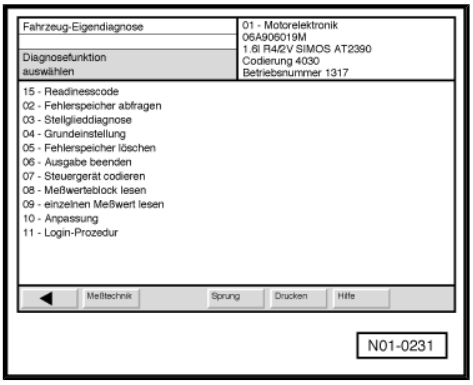

1.5 Read fault memory

Special tools and workshop equipment required

♦ Fault reader -V.A.G 1551- or vehicle system tester -V.A.G 1552- with diagnosis cable -V.A.G 1551/3-

Note

All functions previously carried out with the fault reader -V.A.G 1551- and vehicle system tester -V.A.G 1552- can also be carried out with the vehicle diagnosis, testing and information system -VAS 5051- .

Procedure

– Connect fault reader -V.A.G 1551- or vehicle system tester -V.A.G 1552- and select engine electronics control unit with “address word 01”. When doing this the engine should be idling. (Connecting fault reader -V.A.G 1551- and selecting engine electronics control unit ⇒ page 2).

Only when engine does not start:

– Switch on ignition.

– Switch on fault reader -V.A.G 1551- printer using [print] key. The warning lamp in key must light up.

Indicated on display:

```
Rapid data transfer                HELP
Select function XX
```

– Operate fault reader -V.A.G 1551- taking into account the information on the display:

– Press keys [0] and [2] for function “Interrogate fault memory” and confirm entry with [Q] key.

The number of faults stored or “no fault recognised!” will be shown on the display.

```
X Faults recognised!
```

If one or more faults are stored:

The stored faults will be displayed and printed out one after the other.

When the stored faults have been printed out, the display will show:

```
Rapid data transfer                HELP
Select function XX
```

– Eliminate the printed out faults using the fault table ⇒ page 10 .

– Then erase fault memory ⇒ page 8 .

If no fault is stored:

– Press [↵] key.

Protected by copyright. Copying for private or commercial purposes, in part or in whole, is not permitted unless authorised by Volkswagen AG. Volkswagen AG does not guarantee or accept any liability with respect to the correctness of information in this document. Copyright by Volkswagen AG.
satelettronica

Indicated on display:

```
Rapid data transfer                HELP
Select function XX
```

– Press keys 0 and 6 for function “End output” and confirm entry with Q key.

– Switch off ignition.

1.6 Clear fault memory

Special tools and workshop equipment required

♦ Fault reader -V.A.G 1551- or vehicle system tester -V.A.G 1552- with diagnosis cable -V.A.G 1551/3-

Note

All functions previously carried out with the fault reader -V.A.G 1551- and vehicle system tester -V.A.G 1552- can also be carried out with the vehicle diagnosis, testing and information system -VAS 5051- .

Test prerequisite

• Fault eliminated

Note

After eliminating faults the fault memory must be interrogated again as follows and then erased.

Procedure

– Connect fault reader -V.A.G 1551- or vehicle system tester -V.A.G 1552- and select engine electronics control unit with “address word 01”. Engine must be idling. (Connecting fault reader -V.A.G 1551- and selecting engine electronics control unit ⇒ page 2).

Indicated on display:

```
Rapid data transfer                HELP
Select function XX
```

– Press keys 0 and 2 for function “Interrogate fault memory” and confirm entry with Q key.

– Press → key until all faults still stored have been displayed and the display shows:

```
Rapid data transfer                HELP
Select function XX
```

– Press keys 0 and 5 for “Clear fault memory” function and confirm entry with Q key.

Indicated on display:

```
Rapid data transfer                 ->
Fault memory is cleared!
```

– If the fault memory will not erase there is a fault still in the system and this must be rectified.

– Press → key.

Indicated on display:

```
Rapid data transfer                HELP
Select function XX
```

– Press keys 0 and 6 for function “End output” and confirm entry with Q key.

Automatic test sequence

During test and assembly work, faults can be recognised from other control units, e.g. plugs disconnected. Therefore read and

Volkswagen AG. Volkswagen AG does not guarantee or accept any liability with respect to the correctness of information in this document. Copyright by Volkswagen AG. Protected by copyright. Copying for private or commercial purposes, in part or in whole, is not permitted unless authorised by Volkswagen AG.
satelettronica

clear the fault memories of all control units on completion. To do this:

– Press key 0 twice for address word “Automatic test sequence” and confirm entry with Q key. The fault reader -V.A.G 1551- transmits all known address words one after the other.

When a control unit answers with its identification the number of stored faults appears on the display or “No fault recognised”.

Any system faults that are stored will be displayed one after the other and printed out. The fault reader -V.A.G 1551- will then transmit the next address word.

The automatic test sequence has ended when following is indicated on display:

```
V.A.G SELF-DIAGNOSIS                    HELP
1 - Rapid data transfer*
```

Indicated on display:

```
V.A.G SELF-DIAGNOSIS                    HELP
2 - Flash code output*
```

4) Appears alternately

– Erase all fault memories and then carry out a road test.

Observe applicable safety precautions during road test ⇒ page 43 .

– Again interrogate all control units' fault memories with the “automatic test sequence”. The fault memories must not contain any faults.

If no fault is stored:

– Press → key.

Indicated on display:

```
Rapid data transfer                     HELP
Select function XX
```

– Press keys 0 and 6 for function “End output” and confirm entry with Q key.

– Switch off ignition.

Protected by copyright. Copying for private or commercial purposes, in part or whole, is not permitted unless authorised by Volkswagen AG. Volkswagen AG does not guarantee or accept any liability with respect to the correctness of information in this document. Copyright by Volkswagen AG.
satelettronica

2 Fault table

Note

- *The fault table is listed in ascending order, according to the 5 digit V.A.G fault code on the left.*
- *So-called P codes, e.g. P0118, are also output. These P codes have no significance at present, and will only be applied in future self-diagnosis systems.*
- *Explanations on the fault types (e.g. "open circuit/short-circuit to earth"): ⇒ Fault reader -V.A.G 1551- operating instructions.*
- *If components are indicated as faulty: First check the wiring and connectors to these components as well as the system earth connections according to current flow diagram. Only when no fault can be located here should the component be renewed. This is particularly relevant if faults are output as "sporadic" (SP).*
- *The fault memory must be cleared after rectifying existing faults* *⇒ page 8* *.*

Output on the fault reader -V.A.G 1551- printer, e.g.

16502 P0118 035

Coolant temperature sender -G62-

Signal too large

Sporadic fault

Note

- *16502 = Fault code*
- *P0118 = Additional Fault code*
- *035 = Fault type as a number*
- *Coolant temperature sender -G62- = faulty current path or fault location*
- *Signal too high = Fault type as text*
- *Sporadic faults = Faults that are not always present e.g. loose contact*

Output on the fault reader -V.A.G 1551- printer	Possible fault cause	Possible effects	Fault elimination
00668 Vehicle voltage terminal 30 Implausible signal	♦ Terminal 30 voltage supply relay -J317- defective ♦ Relay sticks (sporadically)	♦ Engine will not start ♦ Various running problems including engine will not start	– Check voltage supply for diesel direct injection system control unit -J248- ⇒ page 68
00741 Brake pedal monitor			

Copyright by Volkswagen AG. Volkswagen AG does not guarantee or accept any liability with respect to the correctness of information in this document. Copying for private or commercial purposes, in part or in whole, is not permitted unless authorised by Volkswagen AG.
satelettronica

Output on the fault reader -V.A.G 1551- printer	Possible fault cause	Possible effects	Fault elimination
Implausible signal	♦ Defective brake light switch -F- ♦ Defective brake pedal switch -F47-	♦ Glow period warning lamp flashes ♦ Brake light defective	– Checking signal from brake light switch -F- and brake pedal switch -F47- ⇒ page 88 .

Output on the fault reader -V.A.G 1551- printer	Possible fault cause	Possible effects	Fault elimination
01044 Control unit incorrectly coded	♦ Invalid control unit coding	♦ Glow period warning lamp flashes	– Code control unit ⇒ page 94
01117 Load signal for alternator terminal DF Implausible signal	♦ Alternator defective ♦ Voltage regulator defective ♦ Wiring open circuit	♦ Engine preheating not functioning	– Check alternator: ⇒ Current flow diagrams, Electrical fault finding and Fitting locations

Output on the fault reader -V.A.G 1551- printer	Possible fault cause	Possible effects	Fault elimination
01193 Low heat output relay -J359- Open circuit/short to earth	♦ Wire open circuit or wire has short to earth ♦ Low heat output relay -J359- defective	♦ Engine preheating not functioning	– Checking low heat output relay -J359- ⇒ page 23 , Final control diagnosis
01194 High heat output relay -J360-	♦ Open circuit or line short-circuit ♦ High heat output relay -J360- defective	♦ Engine preheating not functioning	– Checking high heat output relay -J360- ⇒ page 23 , Final control diagnosis

Output on the fault reader -V.A.G 1551- printer	Possible fault cause	Possible effects	Fault elimination
01282 Variable intake manifold flap change-over valve -N239-			

Copyright by Volkswagen AG. Volkswagen AG does not guarantee or accept any liability with respect to the correctness of information in this document. Copying for private or commercial purposes, in part or in whole, is not permitted unless authorised by Volkswagen AG.
Protected by copyright. Copying for private or commercial purposes, in part or in whole, is not permitted unless authorised by Volkswagen AG.
satelettronica

Output on the fault reader -V.A.G 1551- printer	Possible fault cause	Possible effects	Fault elimination
Short to positive	♦ Wire has short to positive ♦ Variable intake manifold flap change-over valve -N239- defective/ jammed in open direction	♦ Cold starting problems ♦ Cold idling problems ♦ Hard load changes ♦ Idling problems	– Checking variable intake manifold flap change-over valve -N239- ⇒ page 23 , Final control diagnosis
Open circuit/short to earth	♦ Wire open circuit or wire has short to earth ♦ Defective variable intake manifold flap change-over valve -N239-		

Output on the fault reader -V.A.G 1551- printer	Possible fault cause	Possible effects	Fault elimination
16500 P0116 Coolant temperature sender -G62- Implausible signal	♦ Defective coolant temperature sender -G62- ♦ Coolant thermostat defective	♦ Black smoke when starting ♦ Glow period is always approx. 20 seconds	– Check coolant temperature sender -G62- ⇒ page 70 – Checking coolant thermostat ⇒ Engine mechanical system; Rep. Gr. 19 ; Removing and installing coolant pump and compact bracket
16705 P0321 Engine speed sender -G28- Implausible signal	♦ Defective engine speed sender -G28- ♦ Gap speed sender/ sender wheel too large ♦ Metal particles on engine speed sender -G28- or retainer loose	♦ Engine will not start ♦ Engine stalls ♦ Glow period warning lamp flashes ♦ Rev. counter no display	– Check engine speed sender -G28- ⇒ page 68

Output on the fault reader -V.A.G 1551- printer	Possible fault cause	Possible effects	Fault elimination
16706 P0322 Engine speed sender -G28-			

satelettronica
Protected by copyright. Copying for private or commercial purposes, in part or in whole, is not permitted unless authorised by Volkswagen AG. Volkswagen AG does not guarantee or accept any liability with respect to the correctness of information in this document. Copyright by Volkswagen AG.

Output on the fault reader -V.A.G 1551- printer	Possible fault cause	Possible effects	Fault elimination
No signal	♦ Open circuit or line short-circuit ♦ Defective engine speed sender -G28-	♦ Engine will not start ♦ Engine stalls ♦ Glow period warning lamp flashes ♦ Rev. counter no display	– Check engine speed sender -G28- ⇒ page 68
16885 P0501 Vehicle speed signal Implausible signal	♦ No signal from speedometer sender -G22- ♦ Dash panel insert defective	♦ Speedometer display not OK. ♦ Vehicle jerks when changing gear	– Checking speed signal ⇒ page 86
16955 P0571 Brake light switch -F- Implausible signal	♦ Defective brake light switch -F- ♦ Defective brake pedal switch -F47-	♦ Glow period warning lamp flashes ♦ Brake light defective	– Checking -F- and brake pedal switch -F47- ⇒ page 88

Output on the fault reader -V.A.G 1551- printer	Possible fault cause	Possible effects	Fault elimination
16989 P0605 Control unit defective	♦ Control unit internally defective	♦ Various running problems ♦ Engine stops	– Renew diesel direct injection system control unit -J248- ⇒ page 94
17568 P1160 Intake manifold temperature sender -G72- Short to earth	♦ Wiring short to earth ♦ Defective intake manifold temperature sender -G72-	♦ Goes to preset value of 136.8 °C	– Check intake manifold temperature sender -G72- ⇒ page 72
17569 P1161 Intake manifold temperature sender -G72- Open circuit/short to positive	♦ Wiring open circuit or wiring short to positive ♦ Defective intake manifold temperature sender -G72-	♦ Goes to preset value of 136.8 °C	– Check intake manifold temperature sender -G72- ⇒ page 72

satelettronica

Output on the fault reader -V.A.G 1551- printer	Possible fault cause	Possible effects	Fault elimination
17570 P1162 Fuel temperature sender -G81- Short to earth	◆ Wiring short to earth ◆ Fuel temperature sender -G81- defective	◆ Goes to preset value of -5.4°C ◆ Increased exhaust emissions	– Check fuel temperature sender -G81- ⇒ page 74
17571 P1163 Fuel temperature sender -G81- Open circuit/short to positive	◆ Wiring open circuit or wiring short to positive ◆ Fuel temperature sender -G81- defective	◆ Goes to preset value of -5.4°C ◆ Increased exhaust emissions	– Check fuel temperature sender -G81- ⇒ page 74

Output on the fault reader -V.A.G 1551- printer	Possible fault cause	Possible effects	Fault elimination
17653 P1245 Needle lift sender -G80- Short to earth	◆ Wiring short to earth ◆ Needle lift sender G80- defective	◆ Glow period warning lamp flashes ◆ Engine runs rough ◆ Reduced performance ◆ Increased exhaust emissions	– Checking needle lift sender -G80- ⇒ page 79
17654 P1246 Needle lift sender -G80- Implausible signal	◆ Shortage of fuel ◆ Air in fuel system ◆ Injection line to injector with needle lift sender -G80- not OK. ◆ Needle lift sender -G80- defective	◆ Glow period warning lamp flashes ◆ Engine runs rough ◆ Reduced performance ◆ Increased exhaust emissions	– Checking needle lift sender -G80- ⇒ page 79

Output on the fault reader -V.A.G 1551- printer	Possible fault cause	Possible effects	Fault elimination
17655 P1247 Needle lift sender -G80-			

Copyright by Volkswagen AG. Volkswagen AG does not guarantee or accept any liability with respect to the correctness of information in this document. Copying for private or commercial purposes, in part or in whole, is not permitted unless authorised by Volkswagen AG.
satelettronica

Output on the fault reader -V.A.G 1551- printer	Possible fault cause	Possible effects	Fault elimination
Open circuit/short to positive	♦ Wiring open circuit or wiring short to positive ♦ Needle lift sender -G80- defective	♦ Glow period warning lamp flashes ♦ Engine runs rough ♦ Reduced performance ♦ Increased exhaust emissions	– Checking needle lift sender -G80- ⇒ page 79
17656 P1248 Injection commencement regulation Control difference	♦ Fuel tank empty ♦ Fuel supply not OK., lack of fuel ♦ Start of delivery not OK. ♦ Defective commencement of injection valve -N108- ♦ Needle lift sender -G80- defective	♦ Engine runs rough ♦ Reduced performance ♦ Increased exhaust emissions ♦ Poor cold starting	– Fuel filter or fuel line blocked – Checking and adjusting commencement of injection ⇒ page 55 – Check commencement of injection valve -N108- ⇒ page 23 , Final control diagnosis – Checking needle lift sender -G80- ⇒ page 79

Output on the fault reader -V.A.G 1551- printer	Possible fault cause	Possible effects	Fault elimination
17659 P1251 Commencement of injection valve -N108- Short to positive	♦ Wire has short to positive	♦ Engine knocks when idling, because commencement of injection is constantly “advanced”	– Check commencement of injection valve -N108- ⇒ page 23 , Final control diagnosis
17660 P1252 Commencement of injection valve -N108- Open circuit/short to earth	♦ Wiring open circuit ♦ Defective commencement of injection valve -N108-	♦ Engine knocks when idling, because commencement of injection is constantly “advanced”	– Check commencement of injection valve -N108- ⇒ page 23 , Final control diagnosis
	♦ Wiring short to earth	♦ Poor performance, because commencement of injection is constantly “retarded”	

satelettronica
Copyright by Volkswagen AG. Volkswagen AG does not guarantee or accept any liability with respect to the correctness of information in this document. Copyright by Volkswagen AG. Volkswagen AG. Volkswagen AG. Copyright. Copying for private or commercial purposes, in part or in whole, is not permitted unless authorised by Volkswagen AG. Volkswagen AG does not guarantee or accept any liability with respect to the correctness of information in this document. Copyright by Volkswagen AG.

Protected by copyright. Copying for private or commercial purposes, in part or in whole, is not permitted unless authorised by Volkswagen AG. Volkswagen AG does not guarantee or accept any liability with respect to the correctness of information in this document. Copyright by Volkswagen AG.

Output on the fault reader -V.A.G 1551- printer	Possible fault cause	Possible effects	Fault elimination
17663 P1255 Coolant temperature sender -G62- Short to earth	♦ Wiring short to earth ♦ Defective coolant temperature sender -G62-	♦ Black smoke when starting ♦ Glow plugs always operate for about 20 seconds	– Check coolant temperature sender -G62- ⇒ page 70
17664 P1256 Coolant temperature sender -G62- Open circuit/short to positive	♦ Wiring open circuit or wiring short to positive ♦ Defective coolant temperature sender -G62-	♦ Black smoke when starting ♦ Glow plugs always operate for about 20 seconds	– Check coolant temperature sender -G62- ⇒ page 70

Output on the fault reader -V.A.G 1551- printer	Possible fault cause	Possible effects	Fault elimination
17762 P1354 Modulating piston movement sender -G149- Electrical fault in current circuit	♦ Injection pump defective ♦ Open circuit or line short-circuit	♦ Glow period warning lamp flashes ♦ Various running problems ♦ Engine stops	– Checking modulating piston movement sender -G149- ⇒ page 76
17795 P1387 Control unit defective	♦ Control unit internally defective	♦ Various running problems ♦ Engine stops	– Renew diesel direct injection system control unit -J248- ⇒ page 94
17810 P1402 Exhaust gas recirculation valve -N18- Short to positive	♦ Wire has short to positive	♦ No exhaust gas recirculation	– Check exhaust gas recirculation valve -N18- ⇒ page 23 , final control diagnosis

Output on the fault reader -V.A.G 1551- printer	Possible fault cause	Possible effects	Fault elimination
17849 P1441 Exhaust gas recirculation valve -N18-			

satelettronica

Output on the fault reader -V.A.G 1551- printer	Possible fault cause	Possible effects	Fault elimination
Open circuit/short to earth	♦ Wiring open circuit ♦ Exhaust gas recirculation valve -N18- defective	♦ No exhaust gas recirculation	– Check exhaust gas recirculation valve -N18- ⇒ page 23 , final control diagnosis
	♦ Wiring short to earth	♦ Too much exhaust gas recirculation ♦ Reduced output, black smoke	
17911 P1503 Load signal for alternator terminal DF Implausible signal	♦ Alternator defective ♦ Voltage regulator defective ♦ Wiring open circuit	♦ Engine preheating not functioning	– Check alternator: ⇒ Current flow diagrams, Electrical fault finding and Fitting locations
17945 P1537 Fuel shut-off valve -N109- Malfunction	♦ Defective, leaking or blocked fuel shut-off valve -N109-	♦ Reduced performance ♦ Engine stops	– Check fuel shut-off valve -N109- ⇒ page 23 , Final control diagnosis

Output on the fault reader -V.A.G 1551- printer	Possible fault cause	Possible effects	Fault elimination
17946 P1538 Fuel shut-off valve -N109- Open circuit/short to earth	♦ Wire open circuit or wire has short to earth ♦ Defective fuel shut-off valve -N109-	♦ Reduced performance ♦ Engine stops	– Check fuel shut-off valve -N109- ⇒ page 23 , Final control diagnosis
17948 P1540 Vehicle speed signal Signal too large	♦ Road speed more than 260 km/h ♦ Dash panel insert defective	♦ Speedometer display not OK. ♦ Vehicle jerks when changing gear	– Checking speed signal ⇒ page 86

Output on the fault reader -V.A.G 1551- printer	Possible fault cause	Possible effects	Fault elimination
17969 P1561 Metering adjuster -N146-			

Protected by copyright. Copying for private or commercial purposes, in part or in whole, is not permitted unless authorised by Volkswagen AG. Volkswagen AG does not guarantee or accept any liability with respect to the correctness of information in this document. Copyright by Volkswagen AG.
satelettronica

Protected by copyright. Copying for private or commercial purposes, in part or in whole, is not permitted unless authorised by Volkswagen AG. Volkswagen AG does not guarantee or accept any liability with respect to the correctness of information in this document. Copyright by Volkswagen AG.

Output on the fault reader -V.A.G 1551- printer	Possible fault cause	Possible effects	Fault elimination
Control difference	♦ Injection pump defective ♦ Open circuit or line short-circuit	♦ Glow period warning lamp flashes ♦ Various running problems ♦ Engine stops	– Check metering adjuster -N146- ⇒ page 76
17970 P1562 Metering adjuster -N146- Upper stop value	– Upper stop value reached – Defective/blocked metering adjuster -N146-	– Reduced performance – Jerking	– Check metering adjuster -N146- ⇒ page 76
17971 P1563 Metering adjuster -N146- Lower stop value	– Lower stop value reached – Defective/blocked metering adjuster -N146-	– Black smoke – Rough idling	– Check metering adjuster -N146- ⇒ page 76

Output on the fault reader -V.A.G 1551- printer	Possible fault cause	Possible effects	Fault elimination
17978 P1570 Engine control unit locked	♦ Start attempted with an unauthorised key ♦ Attempted manipulation ♦ Short circuit in communication wire ♦ Incorrect coding ♦ Fault in system for immobilizer ♦ Immobilizer control unit defective/missing ♦ Engine control unit renewed but has not been adapted to immobilizer.	♦ Engine starts briefly and then stops again ♦ Glow period warning lamp flashes	– Adapt engine control unit to electronic immobilizer ⇒ page 95 . – Checking electronic immobilizer: ⇒ Electrical system; Rep. Gr. 96 ; Immobilizer

Output on the fault reader -V.A.G 1551- printer	Possible fault cause	Possible effects	Fault elimination
18008 P1600 Voltage supply terminal 15			

satelettronica

Output on the fault reader -V.A.G 1551- printer	Possible fault cause	Possible effects	Fault elimination
Voltage too low	♦ No current supply when ignition is on (terminal 15)	♦ Various running problems including engine will not start	– Check voltage supply for diesel direct injection system control unit -J248- ⇒ page 68
18009 P1601 Voltage supply relay - terminal 30 -J317-	♦ Terminal 30 voltage supply relay -J317- defective ♦ Relay sticks (sporadically)	♦ Engine will not start ♦ Various running problems including engine will not start	– Check voltage supply for diesel direct injection system control unit -J248- ⇒ page 68
18017 P1609 Crash shut-off triggered	♦ Airbag triggered		⇒ Body self-diagnosis; Rep. Gr. 01 ; Self-diagnosis for airbag systems

Output on the fault reader -V.A.G 1551- printer	Possible fault cause	Possible effects	Fault elimination
18020 P1612 Engine control unit incorrectly coded	♦ Invalid control unit coding	♦ Glow period warning lamp flashes	– Code control unit ⇒ page 94
18026 P1618 Glow plug relay -J52- Short to positive	♦ Wire has short to positive ♦ Defective glow plug relay -J52-	♦ No glow period ♦ Poor cold starting ♦ Glow period warning lamp -K29- flashes	– Check glow plug relay -J52- ⇒ page 23 , Final control diagnosis
18027 P1619 Glow plug relay -J52- Open circuit/short to earth	♦ Wire open circuit or wire has short to earth ♦ Defective glow plug relay -J52-	♦ No glow period ♦ Poor cold starting ♦ Glow period warning lamp -K29- flashes	– Check glow plug relay -J52- ⇒ page 23 , Final control diagnosis

Output on the fault reader -V.A.G 1551- printer	Possible fault cause	Possible effects	Fault elimination
18039 P1631 Accelerator position sender -G79-			

Protected by copyright. Copying for private or commercial purposes, in part or in whole, is not permitted unless authorised by Volkswagen AG. Volkswagen AG does not guarantee or accept any liability with respect to the correctness of information in this document. Copyright by Volkswagen AG.
satelettronica

Output on the fault reader -V.A.G 1551- printer	Possible fault cause	Possible effects	Fault elimination
Signal too large	♦ Defective accelerator position sender -G79-	♦ Increased idling speed	– Checking accelerator position sender -G79- : ⇒ Engine mechanical system; Rep. Gr. 20 ; Accelerator mechanism: 10.99 > (Engine codes AGD, AKU, ASX)
18040 P1632 Accelerator position sender -G79- Supply voltage	♦ Wiring open circuit ♦ Operating voltage too high or too low	♦ Glow period warning lamp flashes ♦ Increased idling speed	– Checking accelerator position sender -G79- : ⇒ Engine mechanical system; Rep. Gr. 20 ; Accelerator mechanism: 10.99 > (Engine codes AGD, AKU, ASX)
18044 P1636 Powertrain data bus No message from ABS CU	♦ Fault in data lines to airbag control unit		– Check data bus ⇒ page 93

Output on the fault reader -V.A.G 1551- printer	Possible fault cause	Possible effects	Fault elimination
18047 P1639 Accelerator position sender -G79- with accelerator position sender 2 -G185- [5] Implausible signal	♦ Defective accelerator position sender -G79-	♦ Increased idling speed	– Checking accelerator position sender -G79- : ⇒ Engine mechanical system; Rep. Gr. 20 ; Accelerator mechanism: 10.99 > (Engine codes AGD, AKU, ASX)
18048 P1640 Control unit defective	♦ Control unit internally defective	♦ Various running problems ♦ Engine stops	– Renew diesel direct injection system control unit -J248- ⇒ page 94
18050 P1642 Please read out airbag CU fault memory	♦ Fault in airbag system	♦ Airbag warning lamp lights up	– Interrogating airbag system fault memory: ⇒ Body self-diagnosis; Rep. Gr. 01 ; Self-diagnosis for airbag systems

5) Incorrect fault text display. Correct display reads: Accelerator position sender -G79- , implausible signal

Protected by copyright. Copying for private or commercial purposes, in part or in whole, is not permitted unless authorised by Volkswagen AG. Volkswagen AG does not guarantee or accept any liability with respect to the correctness of information in this document. Copyright by Volkswagen AG.
satelettronica

Output on the fault reader -V.A.G 1551- printer	Possible fault cause	Possible effects	Fault elimination
18056 P1648 Powertrain data bus Defective	♦ Fault in data wire to ABS control unit ♦ Fault in ABS system	♦ Various running problems (gear change jolts, load change jolts) ♦ No dynamic handling control ♦ No TCS function ♦ No EBC function	– Check data bus ⇒ page 93
18057 P1649 Powertrain data bus No message from ABS CU	♦ Fault in data wire to ABS control unit	♦ No dynamic handling control ♦ No TCS function ♦ No EBC function	– Checking matching resistor for data bus ⇒ page 93
18058 P1650 Powertrain data bus No message from instrument cluster	♦ Fault in the data lines to instrument cluster		– Checking matching resistor for data bus ⇒ page 93

Output on the fault reader -V.A.G 1551- printer	Possible fault cause	Possible effects	Fault elimination
18065 P1657 Air conditioner input/ output Short to positive	♦ Short-circuit in line connection	♦ Vehicle acceleration reduced when air conditioner is switched on	– Checking AC compressor shut-off function ⇒ page 23 , final control diagnosis
18090 P1682 Powertrain data bus Implausible message from ABS CU	♦ Fault in data wire to ABS control unit	♦ No dynamic handling control ♦ No TCS function ♦ No EBC function	– Checking matching resistor for data bus ⇒ page 93

Output on the fault reader -V.A.G 1551- printer	Possible fault cause	Possible effects	Fault elimination
19459 P3003 Low heat output relay -J359-			

Protected by copyright. Copying for private or commercial purposes, in part or in whole, is not permitted unless authorised by Volkswagen AG. Volkswagen AG does not guarantee or accept any liability with respect to the correctness of information in this document. Copyright by Volkswagen AG.

satelettronica

Output on the fault reader -V.A.G 1551- printer	Possible fault cause	Possible effects	Fault elimination
Short to positive	♦ Wiring open circuit ♦ Short to positive ♦ Low heat output relay -J359- defective	♦ Engine preheating not functioning	– Checking low heat output relay -J359- ⇒ page 23 , Final control diagnosis
19461 P3005 High heat output relay -J360- Short to positive	♦ Wiring open circuit ♦ Short to positive ♦ High heat output relay -J360- defective	♦ Engine preheating not functioning	– Checking high heat output relay -J360- ⇒ page 23 , Final control diagnosis

Output on the fault reader -V.A.G 1551- printer	Possible fault cause	Possible effects	Fault elimination
19560 P3104 Variable intake manifold flap change-over valve -N239- Short to positive	♦ Short to positive	♦ Harder engine stop jolts	– Check variable intake manifold flap change-over valve -N239- ⇒ page 82
19561 P3105 Variable intake manifold flap change-over valve -N239- Open circuit/short to earth	♦ Wiring open circuit ♦ Variable intake manifold flap change-over valve defective	♦ Harder engine stop jolts	– Check variable intake manifold flap change-over valve -N239- ⇒ page 82

Protected by copyright. Copying for private or commercial purposes, in part or in whole, is not permitted unless authorised by Volkswagen AG. Volkswagen AG does not guarantee or accept any liability with respect to the correctness of information in this document. Copyright by Volkswagen AG.
satelettronica

Protected by copyright. Copying or distribution, in whole, is not permitted unless authorised by Volkswagen AG. Volkswagen AG does not guarantee or accept any liability with respect to the correctness of information in this document. Copyright by Volkswagen AG.

3 Final control diagnosis

3.1 Performing final control diagnosis

The final control diagnosis activates the following components in the stated sequence:

1. Commencement of injection valve -N108-
2. Exhaust gas recirculation valve -N18-
3. AC compressor shut-off function
4. Variable intake manifold flap change-over valve -N239-
5. Fuel shut-off valve -N109-
6. Glow plug relay -J52-
7. Glow period warning lamp -K29-

Vehicles with m-equipment only:

8. Low heat output relay -J359-
9. High heat output relay -J360-

Note

- *During final control diagnosis, the individual final controls will be activated for approx. 30 s, unless the next final control is selected by pressing the → key.*
- *The ignition must be switched off before repeating the final control diagnosis.*

Special tools and workshop equipment required

- Fault reader -V.A.G 1551- or vehicle system tester -V.A.G 1552- with diagnosis cable -V.A.G 1551/3-

satelettronica

Test prerequisites

- Fuses must be OK.
- Strip fuses in fuse box/battery OK.
- The battery voltage must be at least 11.5 V.
- Earth connections between engine and body must be OK.
- All electrical consumers, e.g. lights and rear window heating, must be switched off.

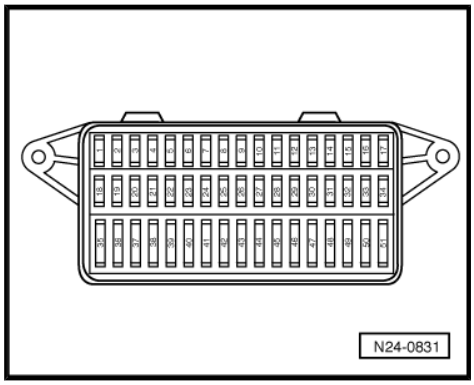

Procedure

– Connect fault reader -V.A.G 1551- or vehicle system tester -V.A.G 1552- and select engine electronics control unit with “address word 01”. Engine must be idling. (Connecting fault reader -V.A.G 1551- and selecting engine electronics control unit ⇒ page 2).

Indicated on display:

```
Rapid data transfer                HELP
Select function XX
```

– Operate fault reader -V.A.G 1551- taking into account the information on the display:

– Press keys 0 and 3 for function “Final control diagnosis”.

Indicated on display:

```
Rapid data transfer                Q
03-Final control diagno-
sis
```

3.1.1 Actuating commencement of injection valve -N108-

– Confirm entry with Q key.

Indicated on display:

```
Final control diagnosis                ->
Commencement of injection valve N108
```

Actuating the valve results in a significantly audible change in combustion noise (knocking).

If no change in combustion noise is heard:

– Check injection timing device control range ⇒ page 80 .

3.1.2 Actuating exhaust gas recirculation valve -N18-

– Press → key.

Indicated on display:

```
Final control diagnosis                ->
Exhaust gas recirculation valve N18
```

The valve must click.

Note

The valve clicking cannot be heard because of engine noises and can therefore only be felt by touch.

If the valve does not click:

Protected by copyright. Copying for private or commercial purposes, in part or in whole, is not permitted unless authorised by Volkswagen AG. Volkswagen AG does not guarantee or accept any liability with respect to the correctness of information in this document. Copyright by Volkswagen AG.
satelettronica

– Checking exhaust gas recirculation: ⇒ Engine mechanical system; Rep. Gr. 26 ; Exhaust gas recirculation system: Engine codes AGD, AHG, AKU, ASX

3.1.3 Actuating AC compressor shut-off function

– Press ⏎ key.

Indicated on display:

```
Final control diagnosis                    ->
Conditioner compressor interrup-
tion
```

Air conditioner compressor switch-off is checked.

The test step is also recalled on vehicles without air conditioner system.

– Continue final control diagnosis.

3.1.4 Actuating variable intake manifold flap change-over valve -N239-

– Press ⏎ key.

Indicated on display:

```
Final control diagnosis                    ->
Intake manifold flap change-
over valve N239
```

The valve must click.

Activating the variable intake manifold flap change-over valve -N239- changes the intake noise alternatingly (the change-over valve opens and closes the variable intake manifold flap).

If no changes in intake noise are heard:

– Checking variable intake manifold flap change-over ⇒ page 82 .

– Check variable intake manifold flap change-over valve -N239- ⇒ page 83 .

3.1.5 Actuating fuel shut-off valve -N109-

– Press ⏎ key.

Indicated on display:

```
Final control diagnosis                    ->
Fuel shut-off valveN109
```

The engine must stop.

If the engine does not stop:

– Switch off ignition.

– Unscrew fuel shut-off valve -N109- and remove any metal particles or dirt.

– Repeat final control diagnosis. If the engine does not stop, renew fuel shut-off valve -N109- ⇒ Item 6 (page 46) .

– Continue final control diagnosis with engine stopped and ignition switched on.

3.1.6 Actuating glow plug relay -J52-

– Press ⏎ key.

Indicated on display:

```
Final control diagnosis                    ->
Glow plug relay J52
```

The relay must click.

Protected by copyright. Copying for private or commercial purposes, in part or in whole, is not permitted unless authorised by Volkswagen AG. Volkswagen AG does not guarantee or accept any liability with respect to the correctness of information in this document. Copyright by Volkswagen AG.
satelettronica

If the relay does not click:

– Check glow plug relay -J52- : ⇒ Current flow diagrams, Electrical fault finding and Fitting locations

3.1.7 Actuating glow period warning lamp -K29-

– Press [→] key.

Indicated on display:

```
Final control diagnosis                    ->
Glow period warning lamp K29
```

The warning lamp must flash.

If the warning lamp does not flash:

– Check glow period warning lamp -K29- : ⇒ Current flow diagrams, Electrical fault finding and Fitting locations

3.1.8 Actuating low heat output relay -J359- (vehicles with m-equipment only)

– Press [→] key.

Indicated on display:

```
Final control diagnosis                    ->
Low heat output relay J359
```

The relay must click.

If the relay does not click:

– Check low heat output relay -J359- : ⇒ Current flow diagrams, Electrical fault finding and Fitting locations

3.1.9 Actuating high heat output relay -J360- (vehicles with m-equipment only)

– Press [→] key.

Indicated on display:

```
Final control diagnosis                    ->
High heat output relay J360
```

The relay must click.

If the relay does not click:

– Check high heat output relay -J360- : ⇒ Current flow diagrams, Electrical fault finding and Fitting locations

3.1.10 Continuation for all vehicles

– Press [→] key.

Indicated on display:

```
Rapid data transfer                      HELP
Select function XX
```

– Press keys [0] and [6] for function “End output” and confirm entry with [Q] key.

– Switch off ignition.

Protected by copyright. Copying for private or commercial purposes, in part or in whole, is not permitted unless authorised by Volkswagen AG. Volkswagen AG does not guarantee or accept any liability with respect to the correctness of information in this document. Copyright by Volkswagen AG.

satelettronica

4 Measured value blocks

4.1 Safety precautions

Observe following if test and measuring instruments are required during a road test:

- Test and measuring instruments must be secured to rear seat and operated by a second person from this location.

If test and measuring instruments are operated from front passenger seat and the vehicle is involved in an accident, there is a possibility that the person sitting in this seat may receive serious injuries when the airbag is triggered.

4.2 Read measured value block

Special tools and workshop equipment required

- Fault reader -V.A.G 1551- or vehicle system tester -V.A.G 1552- with diagnosis cable -V.A.G 1551/3-

Protected by copyright. Copying for private or commercial purposes, in part or in whole, is not permitted unless authorised by Volkswagen AG. Volkswagen AG does not guarantee or accept any liability with respect to the correctness of information in this document. Copyright by Volkswagen AG.
satelettronica

Test prerequisites

- Fuses must be OK.
- Strip fuses in fuse box/battery OK.
- The battery voltage must be at least 11.5 V.
- Earth connections between engine and body must be OK.
- All electrical consumers such as e.g. rear window heating must be switched off.
- No faults must be stored in fault memory ⇒ page 7 , interrogating fault memory.
- Coolant temperature must be at least 80°C, ⇒ display group 001, display zone 4.

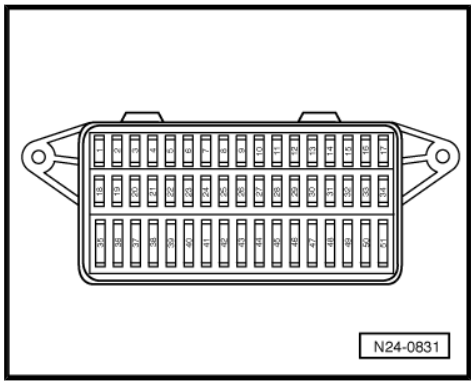

Procedure

– Connect fault reader -V.A.G 1551- or vehicle system tester -V.A.G 1552- and select engine electronics control unit with “address word 01”. Engine must be idling. (Connecting fault reader -V.A.G 1551- and selecting engine electronics control unit ⇒ page 2).

Indicated on display:

```
Rapid data transfer                    HELP
Select function XX
```

– Press keys 0 and 8 for function “Read measured value block” and confirm entry with Q key.

Indicated on display:

```
Read measured value block

Input display group number XXX
```

Note

The display group number 001 is an example to illustrate the sequence.

– Press keys 0, 0 and 1 for “Display group number 1” and confirm entry with Q key.

Indicated on display: (1...4 = display zones)

```
Read measured value block 1            ->
        1          2          3          4
```

Note

To change to another display group proceed as follows:

Display group	Fault reader -V.A.G 1551-	Vehicle system tester -V.A.G 1552-
Higher	Press key 3	Press ↑ key
Lower	Press key 1	Press ↓ key
Skip	Press C key	Press C key

– If the specifications are achieved in all display zones, press → key.

satelettronica
Volkswagen AG. Volkswagen AG does not guarantee or accept any liability with respect to the correctness of information in this document. Copyright by Volkswagen AG.
Reproduction, in part or in whole, is not permitted unless authorised by Volkswagen AG. Copyright by Volkswagen AG. Reproduction for commercial purposes, in part or in whole, is not permitted unless authorised by Volkswagen AG.

Indicated on display:

```
Rapid data transfer                HELP
Select function XX
```

– Press keys 0 and 6 for function “End output” and confirm entry with Q key.

– Switch off ignition.

4.3 Evaluating measured value blocks

4.3.1 Display group 000 at idling speed (engine warm, coolant temperature not below 80°C)

Display group 000 (decimal displayed value)			
• Engine running at idling speed			
Read measured value block 0 (x x x x x x x x x x) ▾ appears on display			
▾ display zones	Specification	Corresponds to	
Display value without meaning (10)	Ignore	---	
Fuel temperature (9)	91…201	20…80 °C	
Intake manifold temperature (8)	182…50	10…100 °C	
Coolant temperature (7)	80…35	80…110 °C	
Atmospheric pressure (6)	181…222	900…1100 mbar	
Display value without meaning (5)	Ignore	---	
Quantity injected (4)	15…45	3.0…9.0 mg/stroke	
Accelerator pedal position (3)	0	0 %	
Commencement of injection (2)	37…75	0° ATDC...3° BTDC	
Engine speed (1) Engine codes AGD, ASX Engine code AKU	41…45 42…46	860…940 rpm 880…960 rpm	

4.3.2 Display group 001 at idling speed (engine warm, coolant temperature not below 80°C)

Display group 001 -injected quantity-					
• Engine running at idling speed					
Read measured value block 1 → (xxxx rpm; xx.x mg/H; x.xxx V; xxx.x °C) ▾ appears on display					
1	2	3	4	▾ display zones	Specification	Evaluation
				Coolant temperature	80.0…110.0 °C	---
				Voltage of modulating piston movement sender -G149- Engine codes AGD, ASX Engine code AKU	1.400…1.900 V 1.500…2.100 V	⇒ page 30
				Quantity injected	3.0…9.0 mg/stroke	⇒ page 30

Protected by copyright. Copying for private or commercial purposes, in part or in whole, is not permitted unless authorised by Volkswagen AG. Volkswagen AG does not guarantee or accept any liability with respect to the correctness of information in this document. Copyright by Volkswagen AG.
satelettronica

Engine speed Engine codes AGD, ASX Engine code AKU	860…940 rpm 880…960 rpm	---

4.3.3 Evaluation: Display group 1, display zone 2 - quantity injected

Display fault reader -V.A.G 1551-	Possible fault cause	Fault elimination
Below 3.0 mg/H	♦ Injection pump too rich	– Renew injection pump ⇒ page 48
Above 9.0 mg/ stroke	♦ Engine too cold ♦ Injection pump too lean	– Run engine at increased speed to warm up and repeat test – Renew injection pump ⇒ page 48

4.3.4 Evaluation: Display group 1, display zone 3 - voltage of modulating piston movement sender

Display fault reader -V.A.G 1551-	Possible fault cause	Fault elimination
Less than specification	♦ Injection pump too rich	– Renew injection pump ⇒ page 48
Higher than specification	♦ Engine too cold ♦ Injection pump too lean	– Run engine at increased speed to warm up and repeat test – Renew injection pump ⇒ page 48

4.3.5 Display group 002 at idling speed (engine warm, coolant temperature not below 80 °C)

Display group 002 -idling speed-						
• Engine running at idling speed						
Read measured value block → 2 xxxx rpm	xxx.x %	x x x	xxx.x °C	▾ appears on display		
1	2	3	4	▾ display zones	Specification	Evaluation
				Coolant temperature	80.0…110.0 °C	---
			Operating condition		0 1 0	⇒ page 31
		Accelerator pedal position			0.0 %	⇒ page 30
	Engine speed Engine codes AGD, ASX Engine code AKU				860…940 rpm 880…960 rpm	---

4.3.6 Evaluation: Display group 2, display zone 2 - accelerator position

Display fault reader -V.A.G 1551-	Possible fault cause	Fault elimination
1.0…100.0 %	♦ Defective accelerator position sender -G79-	– Checking accelerator position sender -G79- : ⇒ Engine mechanical system; Rep. Gr. 20 ; Accelerator mechanism: 10.99 > (Engine codes AGD, AKU, ASX)

Copyright by Volkswagen AG. Volkswagen AG does not guarantee or accept any liability with respect to the correctness of information in this document. Copying for private or commercial purposes, in part or in whole, is not permitted unless authorised by Volkswagen AG.
satelettronica

Display fault reader -V.A.G 1551-	Possible fault cause	Fault elimination
	◆ Open circuit to accelerator position sender -G79-	

4.3.7 Evaluation: Display group 2, display zone 3 - operating condition

Note

Significance of figures in 3-digit number block for engine operating condition:

Significance if display = 1			
x	x	x	Engine operating condition
		1	Air conditioner compressor switched on
	1		Idling switch closed
1			Increased idling speed because air conditioner is switched on

4.3.8 Display group 003 at idling speed (engine warm, coolant temperature not below 80 °C)

Display group 003 -Exhaust gas recirculation-						
• Engine running at idling speed						
Read measured value block 3 →				▾ appears on display		
xxxx rpm			xxx %			
1	2	3	4	▾ display zones	Specification	Evaluation
				Duty cycle of exhaust gas recirculation valve -N18-	94…96 %	---
	Engine speed Engine codes AGD, ASX Engine code AKU				860…940 rpm 880…960 rpm	---

4.3.9 Display group 004 at idling speed (engine warm, coolant temperature not below 80 °C)

Display group 004 -Commencement of injection-						
• Engine running at idling speed						
Read measured value block 4 →				▾ appears on display		
xxxx rpm	xx.x ° B/ ATDC	xx.x ° B/ ATDC	xxx %			
1	2	3	4	▾ display zones	Specification	Evaluation
				Duty cycle of commencement of injection valve -N108-	2…80 %	---

satelettronica

		Commencement of injection (actual)	0° ATDC…3° BTDC	⇒ page 32
		Commencement of injection (specified)	0° ATDC…3° BTDC	⇒ page 32
	Engine speed Engine codes AGD, ASX Engine code AKU		860…940 rpm 880…960 rpm	---

4.3.10 Evaluation: Display group 4, display zone 2 - commencement of injection (specified)

Display fault reader -V.A.G 1551-	Possible fault cause	Fault elimination
Over 3.0° BTDC	♦ Engine too cold	– Run engine at increased speed to warm up and repeat check

4.3.11 Evaluation: Display group 4, display zone 3 - commencement of injection (actual)

Display fault reader -V.A.G 1551-	Possible fault cause	Fault elimination
Over 3.0° BTDC	♦ Engine too cold	– Run engine at increased speed to warm up and repeat check
	♦ Injection pump set too “advanced”	– Dynamically checking and adjusting commencement of injection ⇒ page 55
	♦ Defective commencement of injection valve -N108-	– Check commencement of injection valve -N108- ⇒ page 23 , Final control diagnosis
Later than 0.0° ATDC	♦ Injection pump set extremely “retarded”	– Dynamically checking and adjusting commencement of injection ⇒ page 55
	♦ Defective commencement of injection valve -N108-	– Check commencement of injection valve -N108- ⇒ page 23 , Final control diagnosis
	♦ Injection timing device blocked	

4.3.12 Display group 005

Note

The values displayed are not relevant for fault finding within the service department.

Display group 005 -starting conditions-						
Read measured value block 5 →				▾ appears on display		
xxxx rpm	xx.x mg/H	xx.x ° B/ATDC	xxx.x °C			
1	2	3	4	▾ display zones	Specification	Evaluation
				Coolant temperature	---	---
				Commencement of injection (actual)	---	---

satelettronica

	Starting quantity	---	---
	Engine speed	---	---

4.3.13 Display group 006 with ignition switched on

Display group 006 -switch positions-						
• Ignition on, engine not running						
Read measured value block → 6 xxx km/h x x x xxxxxx xxx				▾ appears on display		
1	2	3	4	▾ display zones	Specification	Evaluation
				Cruise control system[6]	255	---
			Cruise control system		000000	⇒ page 33
		Brake pedal monitor			0 0 0	⇒ page 33
	Speed				0	---

6) 0 = Vehicles with cruise control system, cruise control system switched off 1 = Vehicles with cruise control system, cruise control system switched on 255 = Vehicles without cruise control system

4.3.14 Evaluation: Display group 6, display zone 2 - brake pedal monitoring

Note

Significance of figures in 3-digit number block for brake pedal monitoring:

Significance if display = 1			
x	x	x	Brake pedal monitor
		1	Brake light switch -F- closed
	1		Brake pedal switch -F47- open
1			Clutch pedal switch -F36- open

4.3.15 Evaluation: Display group 6, display zone 3 - cruise control system

Note

Significance of figures in 6-digit number block for cruise control system:

Significance if display = 1						
x	x	x	x	x	x	Cruise control system
					1	Cruise control system switched on
				1		Cruise control and memory switched off
			1			Deceleration
		1				Resume/acceleration

satelettronica
Protected by copyright. Copyright by Volkswagen AG. Volkswagen AG does not guarantee or accept any liability with respect to the correctness of information in this document. Copyright by Volkswagen AG. Reproduction or publication in whole or in part is not permitted unless authorised by Volkswagen AG. Volkswagen AG does not guarantee or accept any liability with respect to the correctness of information in this document. Copyright by Volkswagen AG.

Significance if display = 1						
	1					Brake pedal operated
1						Clutch pedal operated

4.3.16 Display group 007 with ignition switched on (engine cold and not running)

Display group 007 -temperatures-						
• Ignition on, engine not running						
Read measured value block → 7 xxx.x °C		xxx.x °C	xxx.x °C	▾ appears on display		
1	2	3	4	▾ display zones	Specification	Evaluation
				Coolant temperature	Approx. ambient temperature[7)]	⇒ page 35
				Intake manifold temperature	Approx. ambient temperature[7)]	⇒ page 34
				Fuel temperature	Approx. ambient temperature[7)]	⇒ page 34

7) Details of temperature specifications are not possible. When the engine is cold the fuel, intake air and coolant temperatures must equate approximately to ambient temperature. If a temperature deviates noticeably, then the relevant sender must be checked.

4.3.17 Evaluation: Display group 7, display zone 1 - fuel temperature

Display fault reader -V.A.G 1551-	Possible fault cause	Fault elimination
- 5.4 °C	♦ Short circuit or fuel temperature sender -G81- defective	– Check fuel temperature sender -G81- ⇒ page 74 – If a fault is present the measured value block indicates a constant fuel temperature of -5.4°C

4.3.18 Evaluation: Display group 7, display zone 3 - intake manifold temperature

Display fault reader -V.A.G 1551-	Possible fault cause	Fault elimination
approx. 136.8 °C	♦ Defective intake manifold temperature sender -G72-	– Check intake manifold temperature sender -G72- ⇒ page 72 – If a fault is present the measured value block indicates a constant intake manifold temperature of approx.136.8°C

Protected by copyright. Copyright by Volkswagen AG.
Copyright by Volkswagen AG. VW does not guarantee or accept any liability with respect to the correctness of information in this document. Copying for private or commercial purposes, in whole or in part, is not permitted unless authorised by Volkswagen AG.
satelettronica

4.3.19 Evaluation: Display group 7, display zone 4 - coolant temperature

Display fault reader -V.A.G 1551-	Possible fault cause	Fault elimination
Large deviation from ambient temperature	♦ Short circuit or coolant temperature sender -G62- defective	– Check coolant temperature sender -G62- ⇒ page 70 – If a fault is present the fuel temperature is alternatively displayed

4.3.20 Display group 009

Note

The values displayed are not relevant for fault finding within the service department.

Display group 009 -injected quantity limitation-						
Read measured value block 9 →				▾ appears on display		
xxxx rpm	xx.x mg/H	xx.x mg/H				
1	2	3	4	▾ display zones	Specification	Evaluation
			Injected quantity limitation from automatic gearbox during gear change		---	---
		Injected quantity (cruise control system active)			---	---
	Engine speed				---	---

4.3.21 Display group 012

Note

The values displayed are not relevant for fault finding within the service department.

Display group 012 -glow plug system-						
Read measured value block 12 →				▾ appears on display		
xxxxxxxx	xx.xx	xx.x V	xxx.x °C			
1	2	3	4	▾ display zones	Specification	Evaluation
			Coolant temperature		---	---
		Voltage supply from control unit			---	---
	Pre-glow period				---	---
Glow plug system status					---	---

4.3.22 Display group 013 at idling speed (engine warm, coolant temperature not below 80 °C)

Display group 013 -idling speed smooth running control-

Protected by copyright. Copying for private or commercial purposes, in part or in whole, is not permitted unless authorised by Volkswagen AG. Volkswagen AG does not guarantee or accept any liability with respect to the correctness of information in this document. Copyright by Volkswagen AG.
satelettronica

• Engine running at idling speed						
Read measured value block 13 →				▾ appears on display		
x.xx mg/H	x.xx mg/H	x.xx mg/H	x.xx mg/H			
1	2	3	4	▾ display zones	Specification	Evaluation
				Smooth running control Cyl. 4 quantity injected	- 2.0…+ 2.0 mg/stroke	⇒ page 36
				Smooth running control Cyl. 3 quantity injected	- 2.0…+ 2.0 mg/stroke	⇒ page 36
				Smooth running control Cyl. 2 quantity injected	- 2.0…+ 2.0 mg/stroke	⇒ page 36
				Smooth running control Cyl. 1 quantity injected	- 2.0…+ 2.0 mg/stroke	⇒ page 36

4.3.23 Evaluation: Display group 13, display zones 1...4 - idling speed smooth running control

- The injection system is equipped with an idling speed smooth running control. There may be power differences between the individual cylinders (component tolerances, jet drillings, compressions etc.) which are recognised and equalized via selective injected quantities.
- Recognition at idling speed is carried out via the signal from the engine speed sender -G28- , which delivers four signals per crankshaft revolution to the control unit. If the signals are delivered at the same rhythm then all cylinders work the same. If one cylinder is weaker then the crankshaft takes longer for the next half revolution. Conversely, a more powerful cylinder accelerates the crankshaft so less time is taken.
- If the control unit recognises a difference, then the relevant cylinder is given more or less fuel, until the engine runs “evenly” again.
- +...mg/stroke: The respective cylinder is less powerful and is therefore supplied with more fuel.
- -...mg/stroke: The respective cylinder is more powerful and is therefore supplied with less fuel.

4.3.24 Display group 015

Note

The values displayed are not relevant for fault finding within the service department.

Display group 015 -fuel consumption-						
Read measured value block 15 →				▾ appears on display		
xxxx rpm	xx.x mg/H	xx.xx l/h	xx.x mg/H			
1	2	3	4	▾ display zones	Specification	Evaluation
				Injection quantity requirement (driver's requirement via accelerator pedal)	---	---

Protected by copyright. Copying for private or commercial purposes, in part or in whole, is not permitted unless authorised by Volkswagen AG. Volkswagen AG does not guarantee or accept any liability with respect to the correctness of information in this document. Copyright by Volkswagen AG.
satelettronica

		Fuel consumption	---	---
		Injection quantity (actual)	---	---
	Engine speed		---	---

4.3.25 Display group 016 at idling

Display group 016 -additional heater-						
• Engine running at idling speed						
Read measured value block 16 →				▾ appears on display		
xxx %	xxxxxxx	xx	xx.x V			
1	2	3	4	▾ display zones	Specification	Evaluation
				Voltage supply from control unit	12.5…14.5 V	---
			Heater element activation		---	⇒ page 37
		Auxiliary heater			---	⇒ page 37
	Alternator loading				5…95 %	---

4.3.26 Evaluation: Display group 16, display zone 2 - additional heater

Note

Significance of figures in 8-digit number block for additional heater:

Significance if display = 1								
x	x	x	x	x	x	x	x	Additional heater switched off, because:
							1	Coolant temperature greater than 70°C...80°C or intake manifold temperature greater than + 5°C
						1		Alternator -C- defective
					1			Battery voltage below 9 V
				1				Engine speed below 875 rpm
			1					Engine started within the last 10 seconds
		1						Coolant temperature sender -G62- or intake manifold temperature sender -G72- defective
	1							Ignore
1								Ignore

4.3.27 Evaluation: Display group 16, display zone 3 - actuation of heater elements

Note

Significance of figures in 2-digit number block for heater element activation:

Protected by copyright. Copying for private or commercial purposes, in part or in whole, is not permitted unless authorised by Volkswagen AG. Volkswagen AG does not guarantee or accept any liability with respect to the correctness of information in this document. Copyright by Volkswagen AG.
satelettronica

Significance if display = 1		
x	x	Heater element activation
	1	Low heat output relay -J359- on
1		High heat output relay -J360- on

4.3.28 Display group 019 at idle speed

Display group 019 -quantity adjuster-						
• Engine running at idling speed						
Read measured value block 19 → x.xxx V x.xxx V				▾ appears on display		
1	2	3	4	▾ display zones	Specification	Evaluation
		Voltage from modulating piston movement sender -G149- (start position stop)			4.100…4.800 V	⇒ page 38
	Voltage from modulating piston movement sender -G149- (stop position stop)				0.500…0.970 V	⇒ page 38

4.3.29 Evaluation: Display group 19, display zones 1 and 2 - voltage from modulating piston movement sender (start and stop position stops)

Display fault reader -V.A.G 1551-	Possible fault cause	Fault elimination
Specification outside tolerance	♦ Injection pump quantity adjuster incorrectly set	– Renew injection pump ⇒ page 48

4.3.30 Display group 000 at full throttle (road test in 3rd gear, coolant temperature not below 80 °C)

Note

- *When testing, accelerate the vehicle at full throttle.*
- *The measured values must be printed out or read (2nd person required) when the revolutions reach 3000 rpm.*

Display group 000 (decimal displayed value)												
• Engine speed 2800...3200 rpm												
Read measured value block 0										▾ appears on display		
x	x	x	x	x	x	x	x	x	x			
1	2	3	4	5	6	7	8	9	10	▾ display zones	Specification	Corresponds to
										Display value without meaning	Ignore	---
								Fuel temperature			91…201	20…80 °C
							Intake manifold temperature				182…50	10…100 °C

Protected by copyright. Copyright by Volkswagen AG. Volkswagen AG does not guarantee or accept any liability with respect to the correctness of information in this document. Copying for private or commercial purposes, in part or in whole, is not permitted unless authorised by Volkswagen AG.
satelettronica

Display group 000 (decimal displayed value)		
Coolant temperature	80…35	80…110 °C
Atmospheric pressure	181…222	900…1100 mbar
Display value without meaning	Ignore	---
Quantity injected Engine codes AGD, ASX Engine code AKU	110…125 100…120	22.0…25.0 mg/ stroke 20.0…24.0 mg/ stroke
Accelerator pedal position	255	100 %
Commencement of injection Engine codes AGD, ASX Engine code AKU	110…150 113…150	5…9° BTDC 6…9° BTDC
Engine speed	133…153	2800...3200 rpm

4.3.31 Display group 004 at full throttle (road test in 3rd gear, coolant temperature not below 80 °C)

Note

- *When testing, accelerate the vehicle at full throttle.*
- *The measured values must be printed out or read (2nd person required) when the revolutions reach 3000 rpm.*

Display group 004 -Commencement of injection-						
• Vehicle operation						
Read measured value block → 4				▾ appears on display		
xxxx rpm	xx.x ° B/ ATDC	xx.x ° B/ ATDC	xxx %			
1	2	3	4	▾ display zones	Specification	Evaluation
				Duty cycle of commencement of injection valve -N108- Engine codes AGD, ASX Engine code AKU	60…95 % 70…95 %	⇒ page 40
			Commencement of injection (actual)		Approx. commencement of inj. (specified)	⇒ page 39
		Commencement of injection (specified) Engine code AGD Engine code AKU Engine code ASX			5.0…9.0° BTDC 6.0…9.0° BTDC 7.0…11.0° BTDC	---
	Engine speed				2800...3200 rpm	---

4.3.32 Evaluation: Display group 4, display zone 3 - commencement of injection (actual)

Display fault reader -V.A.G 1551-	Possible fault cause	Fault elimination
For large deviation from specified value (approx. 5°)	◆ Defective commencement of injection valve -N108-	◆ Check commencement of injection valve -N108- ⇒ page 23 , Final control diagnosis

satelettronica
Protected by copyright. Copyright by Volkswagen AG. Volkswagen AG does not guarantee or accept any liability with respect to the correctness of information in this document. Copyright by Volkswagen AG. Reproduction for commercial purposes, in part or in whole, is not permitted unless authorised by Volkswagen AG.

Display fault reader -V.A.G 1551-	Possible fault cause	Fault elimination
	♦ Injection pump timing way off	– Dynamically checking and adjusting commencement of injection ⇒ page 55
	♦ Air in fuel system	– Check fuel supply system

4.3.33 Evaluation: Display group 4, display zone 4 - duty cycle of commencement of injection valve

Display fault reader -V.A.G 1551-	Possible fault cause	Fault elimination
Specification outside tolerance	♦ Defective commencement of injection valve -N108-	– Check commencement of injection valve -N108- ⇒ page 23 , Final control diagnosis
		– Dynamically checking and adjusting commencement of injection ⇒ page 55
		– Check fuel supply system

4.3.34 Display group 008 at full throttle (road test in 3rd gear, coolant temperature not below 80 °C)

Note

- *When testing, accelerate the vehicle at full throttle.*
- *The measured values must be printed out or read (2nd person required) when the revolutions reach 3000 rpm.*

Display group 008 -quantity injected limitation-						
• Vehicle operation						
Read measured value block 8 →				▾ appears on display		
xxxx rpm	xx.x mg/H	xx.x mg/H	xx.x mg/H			
1	2	3	4	▾ display zones	Specification	Evaluation
				Limitation of quantity injected due to intake air mass (avoidance of smoke) Engine code AGD Engine code AKU	22.0…26.0 mg/stroke 20.0…25.0 mg/stroke	⇒ page 41
			Limitation of quantity injected via engine speed (torque limitation) Engine code AGD Engine code AKU		24.0…25.0 mg/stroke 23.0…24.0 mg/stroke	⇒ page 41
		Quantity injected (driver command) Engine codes AGD, ASX Engine code AKU			40.0…43.0 mg/stroke 38.0…44.0 mg/stroke	⇒ page 41
	Engine speed				2800...3200 rpm	---

Protected by copyright. Copying for private or commercial purposes, in part or in whole, is not permitted unless authorised by Volkswagen AG. Volkswagen AG does not guarantee or accept any liability with respect to the correctness of information in this document. Copyright by Volkswagen AG.

satelettronica

Protected by copyright. Copyright by Volkswagen AG. Volkswagen AG does not guarantee or accept any liability with respect to the correctness of information in this document. Copyright by Volkswagen AG. Protected by copyright. Copying for private or commercial purposes, in part or in whole, is not permitted unless authorised by Volkswagen AG.

4.3.35 Evaluation: Display group 8, display zone 2 - quantity injected (driver command)

Display fault reader -V.A.G 1551-	Possible fault cause	Fault elimination
Below specification	♦ No full throttle	– Repeat test at full throttle
	♦ Defective accelerator position sender -G79-	– Checking accelerator position sender -G79- : ⇒ Engine mechanical system; Rep. Gr. 20 ; Accelerator mechanism: 10.99 > (Engine codes AGD, AKU, ASX)

4.3.36 Evaluation: Display group 8, display zone 3 - quantity injected limitation via engine speed (torque limitation)

Display fault reader -V.A.G 1551-	Possible fault cause	Fault elimination
Below specification	♦ Speed too high or too low	– Read off specification at 3000 rpm

4.3.37 Evaluation: Display group 8, display zone 4 - quantity injected limitation due to intake air mass (avoidance of smoke)

Display fault reader -V.A.G 1551-	Possible fault cause	Fault elimination
Below specification	♦ Air mass drawn in insufficient ♦ Defective variable intake manifold flap change-over valve -N239-	– Checking variable intake manifold flap change-over valve -N239- ⇒ page 23 , Final control diagnosis
	♦ Exhaust recirculation quantity too high ♦ Exhaust gas recirculation valve -N18- defective	– Check exhaust gas recirculation valve -N18- ⇒ page 23 , final control diagnosis

4.3.38 Display group 010 at full throttle (road test in 3rd gear, coolant temperature not below 80 °C)

Note

- *When testing, accelerate the vehicle at full throttle.*
- *The measured values must be printed out or read (2nd person required) when the revolutions reach 3000 rpm.*

Display group 010 -air quantities-	
• Vehicle operation	
Read measured value block → 10 xxxx xxx.x % mbar	▾ appears on display

satelettronica

1	2	3	4	▾ display zones	Specification	Evaluation
				Accelerator pedal position	100.0 %	⇒ page 42
		Atmospheric pressure (ambient pressure)			900…1100 mbar	---

4.3.39 Evaluation: Display group 10, display zone 4 - accelerator position

Display fault reader -V.A.G 1551-	Possible fault cause	Fault elimination
Below 100.0 %	♦ No full throttle	– Repeat test at full throttle
	♦ Defective accelerator position sender -G79-	– Checking accelerator position sender -G79- : ⇒ Engine mechanical system; Rep. Gr. 20 ; Accelerator mechanism: 10.99 > (Engine codes AGD, AKU, ASX)

4.3.40 Display group 011 at full throttle (road test in 3rd gear, coolant temperature not below 80 °C)

Note

- *When testing, accelerate the vehicle at full throttle.*
- *The measured values must be printed out or read (2nd person required) when the revolutions reach 3000 rpm.*

Display group 011 -charge pressure control-						
• Vehicle operation						
Read measured value block 11 →				▾ appears on display		
xxxx rpm			xxx %			
1	2	3	4	▾ display zones	Specification	Evaluation
				Duty cycle of variable intake manifold flap change-over valve -N239-	4…6 %	⇒ page 42
	Engine speed				2800...3200 rpm	---

4.3.41 Evaluation: Display group 11, display zone 4 - duty cycle of variable intake manifold flap change-over valve

Display fault reader -V.A.G 1551-	Possible fault cause	Fault elimination
Specification outside tolerance	♦ Defective variable intake manifold flap change-over valve -N239-	– Checking variable intake manifold flap change-over valve -N239- ⇒ page 23 , Final control diagnosis

Protected by copyright. Copying for private or commercial purposes, in part or in whole, is not permitted unless authorised by Volkswagen AG. Volkswagen AG does not guarantee or accept any liability with respect to the correctness of information in this document. Copyright by Volkswagen AG.

satelettronica

23 – Mixture preparation - injection

1 Repairing diesel direct injection system

The diesel direct injection system control unit -J248- is equipped with a fault memory. Before starting repairs, adjustments and fault finding, the fault memory must be interrogated ⇒ page 7 and final control diagnosis carried out ⇒ page 23 .

Note

- *Certain tests may lead to a fault being detected by the control unit and stored. Therefore, after completing all checks and repairs, interrogate the fault memory and erase if necessary ⇒ page 7 , Interrogating fault memory.*
- *Components marked with * are checked via self-diagnosis ⇒ page 7 , Reading and clearing fault memory.*
- *Components marked with * can be checked using final control diagnosis ⇒ page 23 .*
- *For trouble-free operation of electrical components, a voltage of at least 11.5 V is necessary.*

Safety precautions ⇒ page 43

Rules for cleanliness ⇒ page 43 .

1.1 Safety precautions

To prevent injuries to persons and/or damage to the injection and glow plug system, the following must be noted:

- The ignition must be switched off before connecting or disconnecting injection or glow plug system wiring or tester cables.
- If the engine is to be turned at starter speed, without starting, e.g. when checking compression, disconnect 10-pin connector from injection pump.
- Before disconnecting battery, obtain radio code for radios with anti-theft coding.
- Disconnecting and connecting the battery must only be carried out with the ignition switched off, as the diesel direct injection system control unit -J248- may otherwise be damaged.

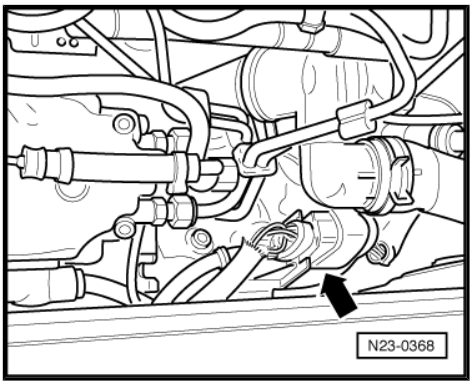

Observe following if test and measuring instruments are required during a road test:

- Test and measuring instruments must be secured to rear seat and operated by a second person from this location.

If test and measuring instruments are operated from front passenger seat and the vehicle is involved in an accident, there is a possibility that the person sitting in this seat may receive serious injuries when the airbag is triggered.

1.2 Rules for cleanliness

When working on the fuel supply and injection systems, pay careful attention to the following “6 rules” for cleanliness:

Copyright by Volkswagen AG. Volkswagen AG does not guarantee or accept any liability with respect to the correctness of information in this document. Copyright by Volkswagen AG. Copying for private or commercial purposes, in part or in whole, is not permitted unless authorized by Volkswagen AG. Protected by copyright.
satelettronica

- Thoroughly clean all unions and adjacent areas before disconnecting.
- Place removed parts on a clean surface and cover. Do not use fluffy cloths!
- Carefully cover opened components or seal if repairs cannot be carried out immediately.
- Install clean components only: do not remove replacement parts from packing until immediately before installing. Do not use parts that have not been stored in their packing (e.g. in tool boxes etc.).
- When system is open: do not work with compressed air if this can be avoided. Do not move vehicle unless absolutely necessary.
- Also ensure that no diesel fuel comes into contact with the coolant hoses. If necessary, the hoses must be cleaned immediately. Damaged hoses must be renewed.

1.3 Fitting locations overview

Components A to C are not shown in the illustration.

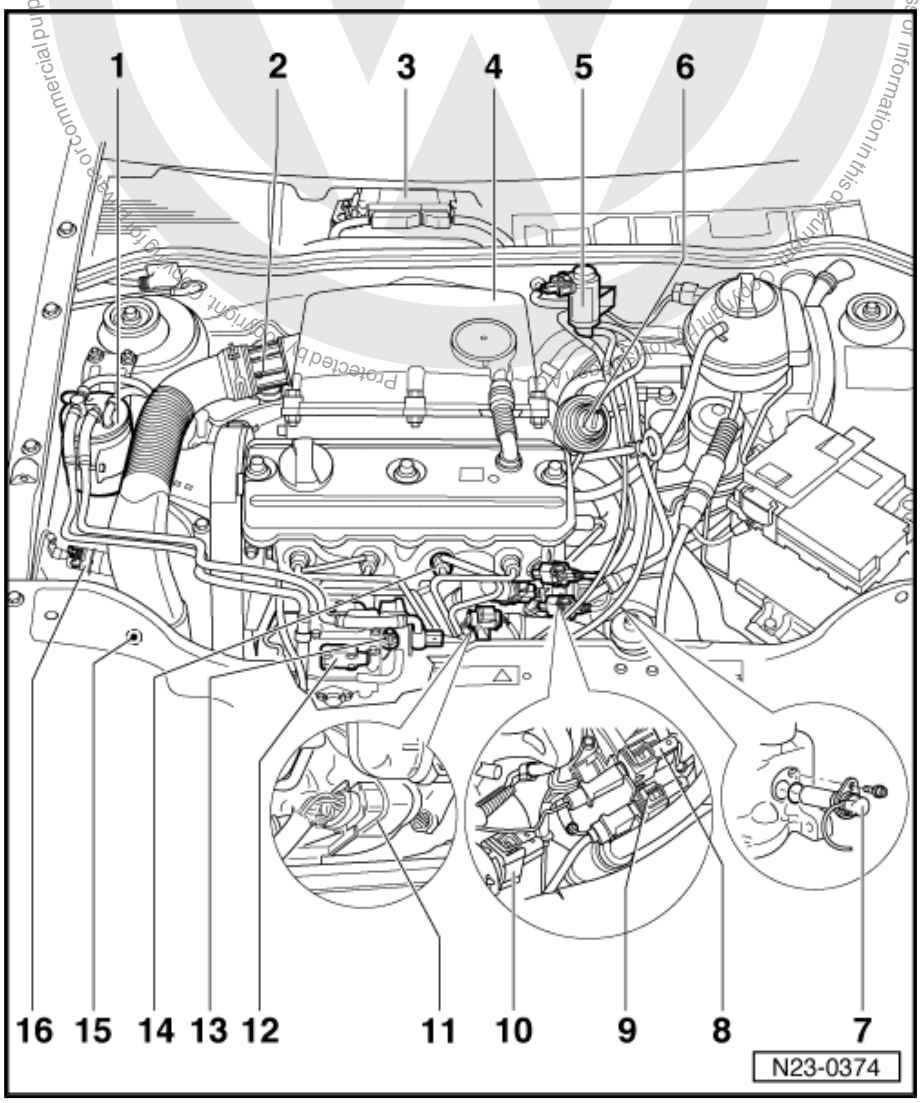

A - Brake light switch -F- * and brake pedal switch -F47-

- ❑ In footwell on brake pedal
- ❑ Checking signal from brake light switch -F- and brake pedal switch -F47- ⇒ page 88 .

B - Clutch pedal switch -F36-

- ❑ In footwell on clutch pedal
- ❑ Checking signal from clutch pedal switch -F36- ⇒ page 90 .

C - Accelerator position sender -G79- *

- ❑ In footwell on accelerator pedal
- ❑ Checking: ⇒ Engine mechanical system; Rep. Gr. 20 ; Accelerator mechanism: 10.99 > (Engine codes AGD, AKU, ASX) >

1 - Fuel filter

- ❑ Repairing fuel filter: ⇒ Engine mechanical system; Rep. Gr. 20 ; Removing and installing parts of the fuel system .

2 - Intake connecting pipe

- ❑ Renew complete only
- ❑ Removing and installing

Protected by copyright. Copying for private or commercial purposes, in part or in whole, is not permitted unless authorised by Volkswagen AG. Volkswagen AG does not guarantee or accept any liability with respect to the correctness of information in this document.
satelettronica

⇒ page 47
- ❑ Check intake manifold flap change-over ⇒ page 82
- ❑ With variable intake manifold flap change-over valve -N239- .
- ❑ Check variable intake manifold flap change-over valve -N239- ⇒ page 83

3 - Diesel direct injection system control unit -J248- *
- ❑ Location: in plenum chamber.
- ❑ Checking voltage supply for diesel direct injection system ⇒ page 68 .
- ❑ Renew ⇒ page 94 .
- ❑ Coding ⇒ page 94 .

4 - Intake connecting pipe
- ❑ Removing and installing: ⇒ Engine mechanical system; Rep. Gr. 15 ; Removing and installing intake connecting pipe .

5 - Exhaust gas recirculation valve -N18- *
- ❑ Checking: ⇒ Engine mechanical system; Rep. Gr. 26 ; Exhaust gas recirculation system: Engine codes AGD, AHG, AKU, ASX .

6 - Exhaust gas recirculation valve -N18-
- ❑ Checking: ⇒ Engine mechanical system; Rep. Gr. 26 ; Exhaust gas recirculation system: Engine codes AGD, AHG, AKU, ASX .

7 - Engine speed sender -G28- *
- ❑ Checking ⇒ page 68 .

8 - 2-pin connector
- ❑ Brown
- ❑ For needle lift sender -G80- .

9 - 3-pin connector
- ❑ Black
- ❑ For engine speed sender -G28-

10 - Coolant temperature sender -G62-
- ❑ Black
- ❑ For engine control unit
- ❑ With coolant temperature sender -G2-
- ❑ If necessary, release pressure in cooling system before removing
- ❑ Checking ⇒ page 70 .

11 - 10-pin connector
- ❑ Black
- ❑ For fuel temperature sender -G81- .
- ❑ For metering adjuster -N146- .
- ❑ For modulating piston movement sender -G149- .
- ❑ For fuel shut-off valve -N109- .
- ❑ For commencement of injection valve -N108- .

12 - Injection pump quantity adjuster
- ❑ With fuel temperature sender -G81- .
- ❑ With metering adjuster -N146- *
- ❑ With modulating piston movement sender -G149- .

13 - Fuel shut-off valve -N109-

14 - Injector
- ❑ For cylinder 3 with needle lift sender -G80- .

Protected by copyright. Copying for private or commercial purposes, in part or in whole, is not permitted unless authorised by Volkswagen AG. Volkswagen AG does not guarantee or accept any liability with respect to the correctness of information in this document. Copyright by Volkswagen AG.
satelettronica

15 - Air filter

❑ Location: In front right wheel housing

16 - Intake manifold temperature sender -G72- *

❑ Checking ⇒ page 72 .

1.4 Repairing injection pump

♦ Observe rules for cleanliness ⇒ page 43

♦ Removing and installing injection pump ⇒ page 48

♦ Dynamically checking and adjusting commencement of injection ⇒ page 55

♦ Always renew seals and O-rings

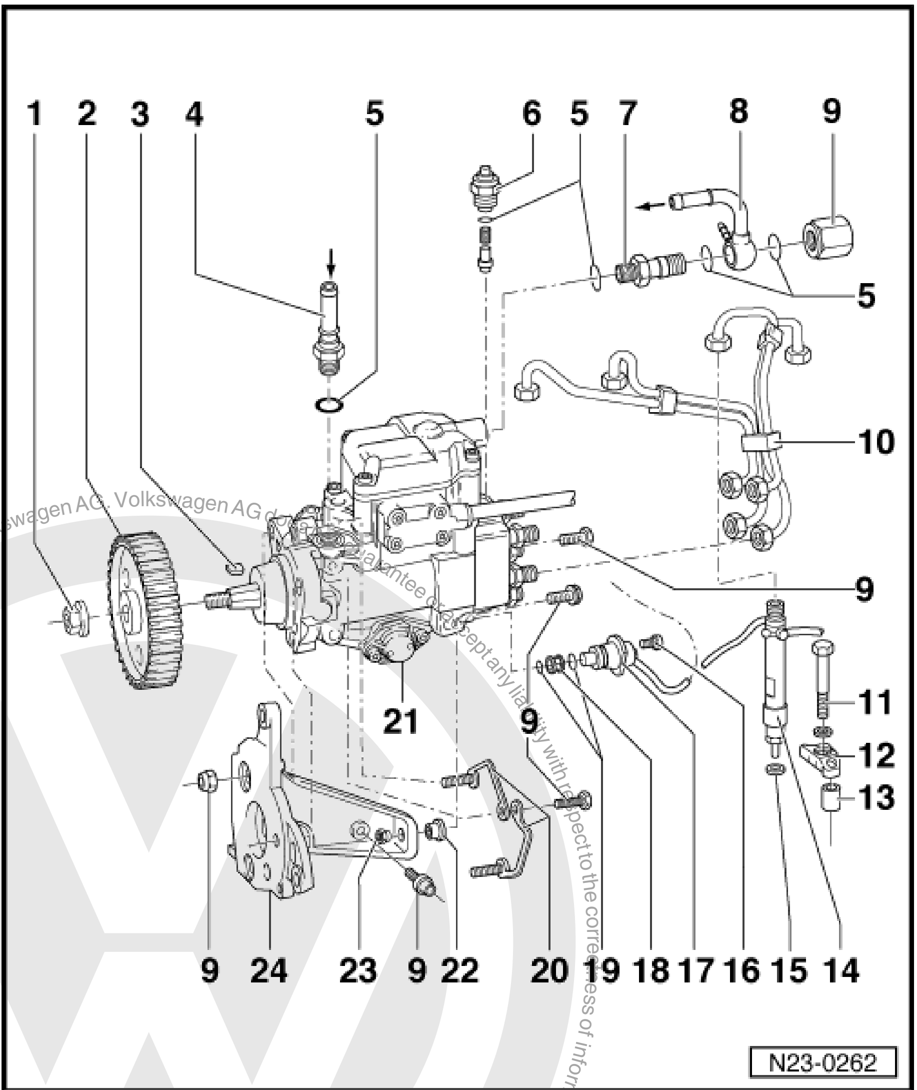

1 - 55 Nm

2 - Injection pump belt pulley

❑ One-piece.

❑ Removing and installing ⇒ page 48 , Removing and installing injection pump.

3 - Woodruff key

❑ Check for secure seating.

4 - Union, 25 Nm

❑ For supply line.

❑ From fuel filter: ⇒ Engine mechanical system; Rep. Gr. 20 ; Removing and installing parts of the fuel system .

5 - Seal

❑ Renew

6 - Fuel shut-off valve -N109- , 40 Nm

7 - Union

❑ For return pipe

8 - Return line

❑ To regulating valve/fuel filter: ⇒ Engine mechanical system; Rep. Gr. 20 ; Removing and installing parts of the fuel system .

9 - 25 Nm

10 - Injector pipes

❑ Tighten to 25 Nm

❑ Remove with ring spanner -3035-

❑ Always remove pipework complete

❑ Do not alter shape

Protected by copyright. Copying for private or commercial purposes, in part or in whole, is not permitted unless authorised by Volkswagen AG. Volkswagen AG does not guarantee or accept any liability with respect to the correctness of information in this document. Copyright by Volkswagen AG.

satelettronica

11 - 20 Nm

12 - Retainer

13 - Mounting bracket

14 - Injector

- ❑ Removing and installing ⇒ page 60
- ❑ Checking ⇒ page 61 .
- ❑ For cylinder 3 with needle lift sender -G80- .
- ❑ Checking needle lift sender -G80- ⇒ page 79

15 - Heat shield seal

- ❑ Renew

16 - 10 Nm

17 - Commencement of injection valve -N108-

- ❑ Checking ⇒ page 80 , Checking injection timing device control range.

18 - Strainer

- ❑ Clean strainer if soiled.

19 - O-ring

- ❑ Renew

20 - Bracket

21 - Injection timing device cover

- ❑ Renew O-ring if leaking.

22 - Sleeve

- ❑ Tapered.

23 - 25 Nm

- ❑ Nut with taper.

24 - Bracket

- ❑ Removing and installing: ⇒ Engine mechanical system; Rep. Gr. 13 ; Dismantling and assembling engine .

1.5 Removing and installing inlet connection

Special tools and workshop equipment required

- ♦ Spring-type clip pliers -VAS 5024 A-

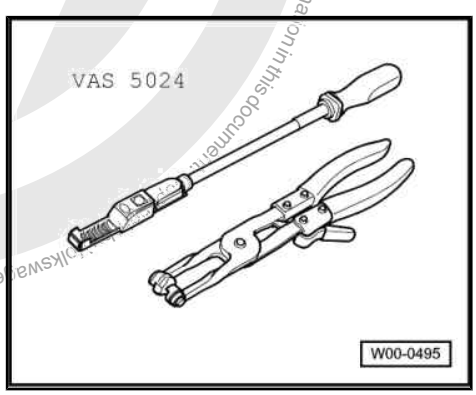

Protected by copyright. Copying for private or commercial purposes, in part or whole, is not permitted unless authorised by Volkswagen AG. Volkswagen AG does not guarantee or accept any liability with respect to the correctness of information in this document. © Copyright by Volkswagen AG.
satelettronica

Removing

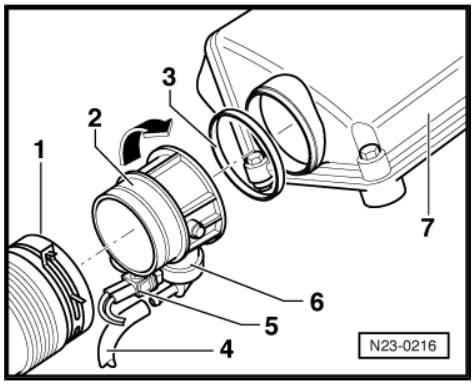

- Remove air filter/inlet connection connecting hose -1- from inlet connection -2-.
- Pull vacuum hose -4- from vacuum unit -6-.
- Pull 2-pin connector -5- off variable intake manifold flap change-over valve -N239- .
- Release inlet connection -2- from bayonet connection by turning to the right -arrow- and remove.
- Remove seal -3- from intake connecting pipe upper section -7-.

Note

Renew seal -3- if damaged.

Installing

Inlet connection installation is carried out in the reverse sequence of removal.

1.6 Removing and installing injection pump

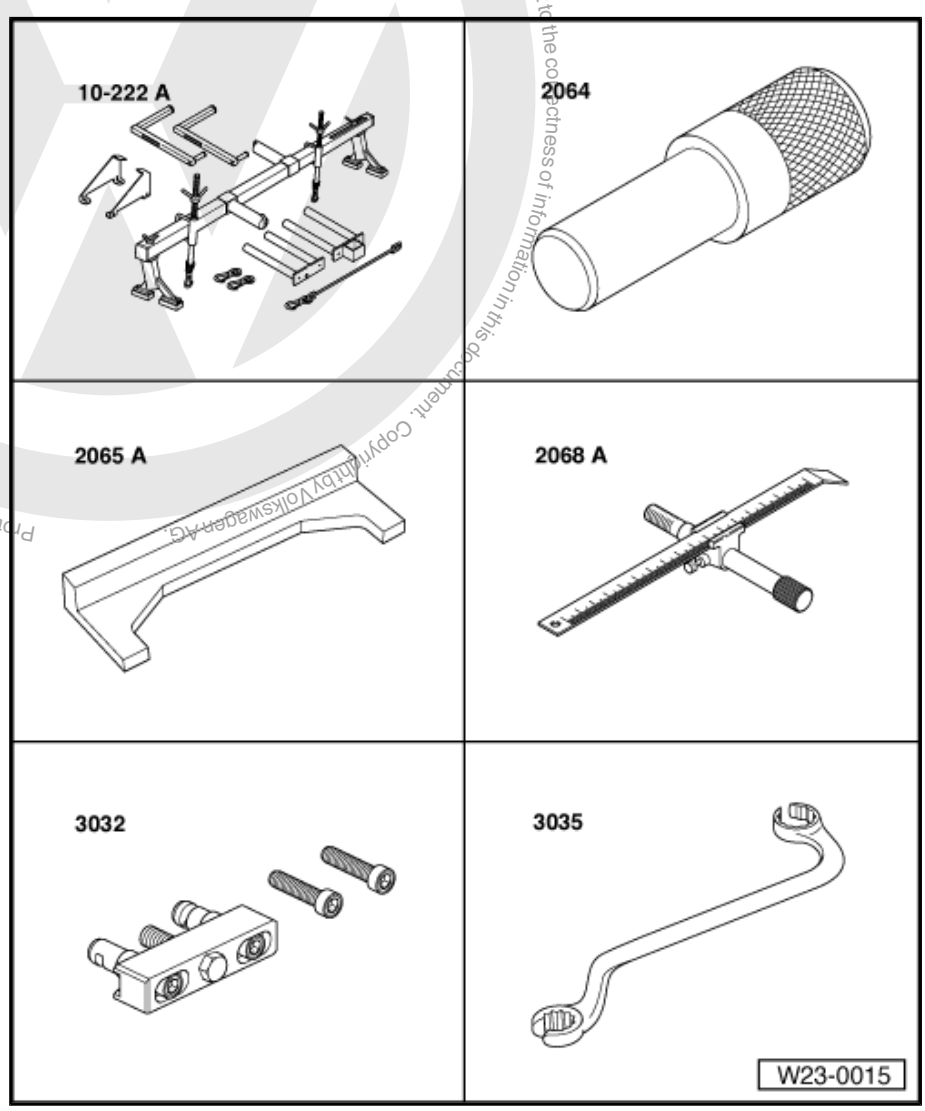

Protected by copyright. Copying for private or commercial purposes, in part or in whole, is not permitted unless authorised by Volkswagen AG. Volkswagen AG does not guarantee or accept any liability with respect to the correctness of information in this document. Copyright by Volkswagen AG.

satelettronica

Special tools and workshop equipment required

- Support bracket -10 - 222 A- with rack -10 - 222 A /1-
- Locking pin -2064-
- Adjustment bar -2065 A-
- TDC adjustment bar -2068 A- (with engine removed)
- Puller -3032-
- Ring spanner -3035-
- Counterhold tool -3036-

- 2-hole pin wrench -3387-
- Adapter set -V.A.G 1318/10-12- Adapter
- Torque wrench -V.A.G 1331- -V.A.G 1331-
- Torque wrench -V.A.G 1332-
- Hand vacuum pump with accessories -V.A.G 1390/-
- Spring-type clip pliers - VAS 5024 A-
- Drift
- Feeler gauges

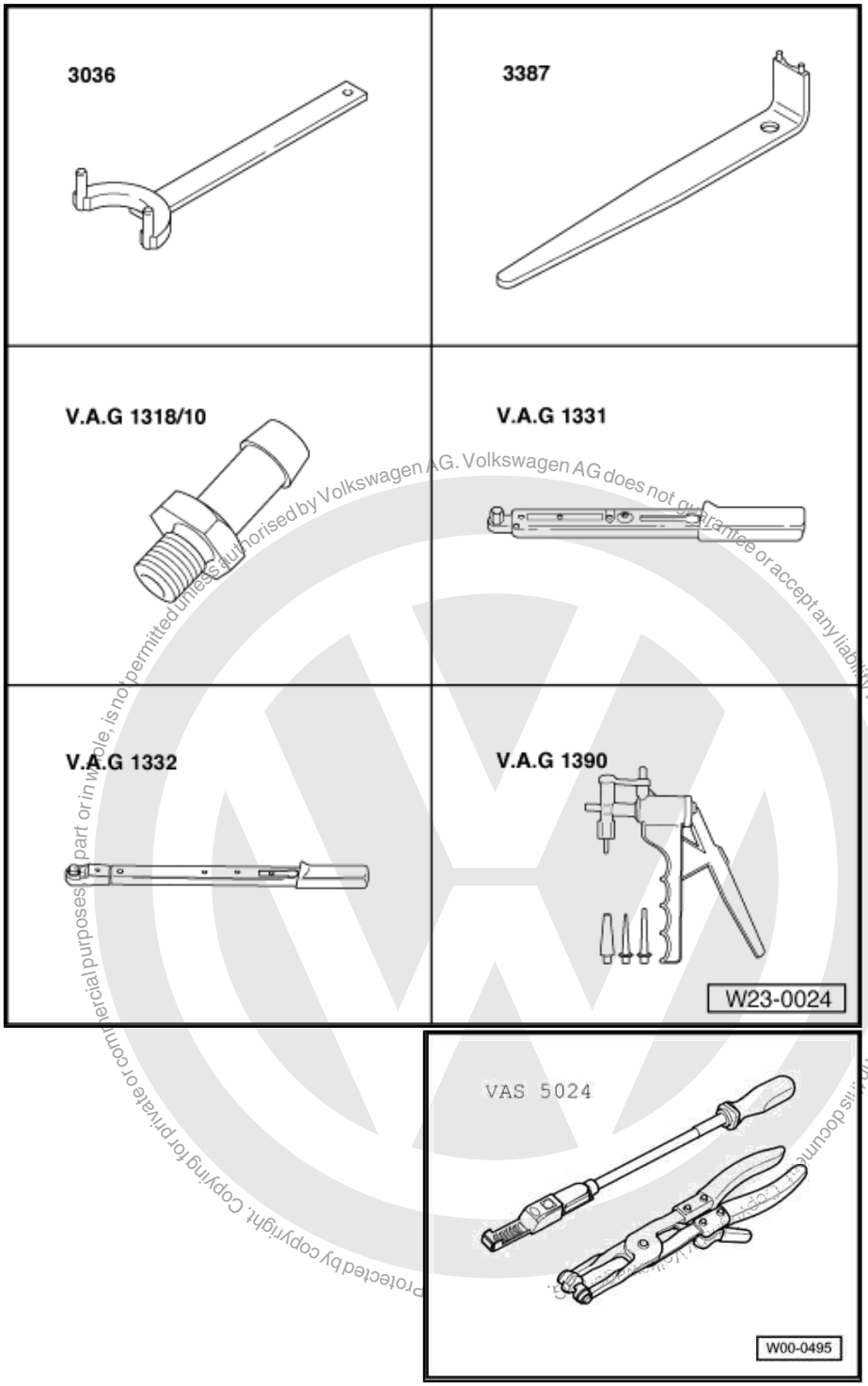

satelettronica
Protected by copyright. Copying for private or commercial purposes, in part or in whole, is not permitted unless authorised by Volkswagen AG. Volkswagen AG does not guarantee or accept any liability with respect to the correctness of information in this document.

Removing

– Remove filter/inlet connection connecting hose.

– Remove upper toothed belt guard and cylinder head cover.

– Turn crankshaft to TDC No. 1 cylinder -arrow-.

Engine removed:

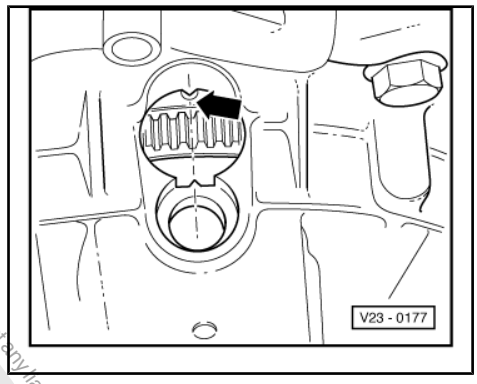

– Install TDC adjustment bar -2068 A- as shown.

– Set TDC adjustment bar -2068 A- to 13.0 mm. The left notch of the vernier scale -arrow A- is the reference point.

– Turn crankshaft until flywheel TDC marking aligns with point of adjustment bar -arrow B-.

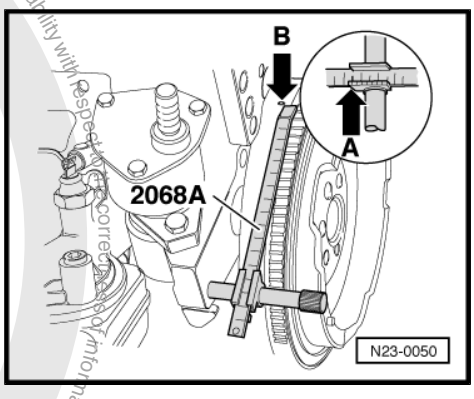

– Lock camshaft with adjustment bar -2065 A- .

– Align adjustment bar -2065 A- as follows: Turn locked camshaft until one end of the adjustment bar -2065 A- contacts cylinder head. Measure clearance which has arisen at other end of adjustment bar -2065 A- with a feeler gauge. Slide a feeler gauge with half of clearance dimension between adjustment bar -2065 A- and cylinder head. Now turn camshaft until adjustment bar -2065 A- contacts feeler gauge. Now insert a second feeler gauge with the same dimension between adjustment bar -2065 A- and cylinder head at other end.

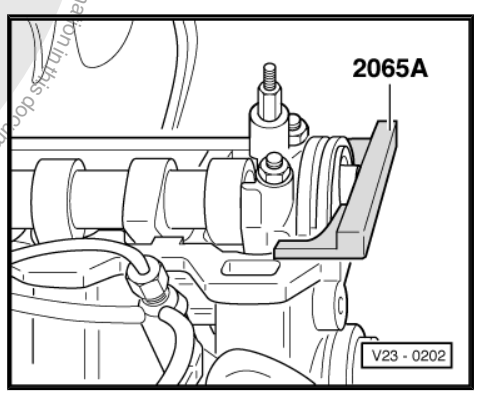

– Assemble and install support bracket -10 - 222 A- with frame -10 - 222 A /1- .

– Insert support bracket into lifting eye on left cylinder head and raise engine slightly.

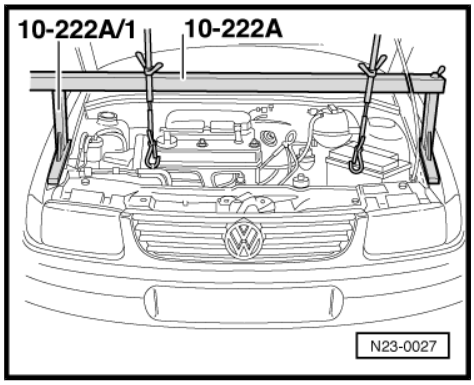

satelettronica

– Remove bolts from engine assembly mounting -arrows- and remove complete assembly mounting.

– Remove lock carrier with attaching parts: ⇒ General body repairs, exterior; Rep. Gr. 50 ; Removing and installing lock carrier with attaching parts .

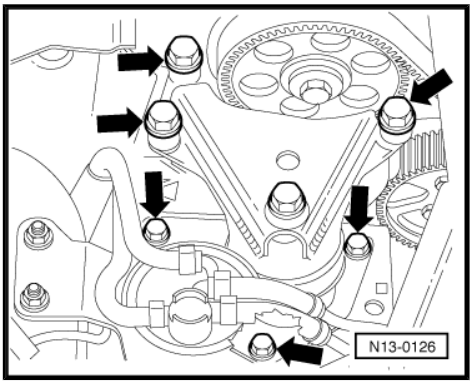

Note

Do not detach the coolant hoses.

– Place lock carrier on the left longitudinal member and a suitable object, e.g. bucket. If necessary, secure lock carrier to prevent slipping off.

– Remove guide roller.

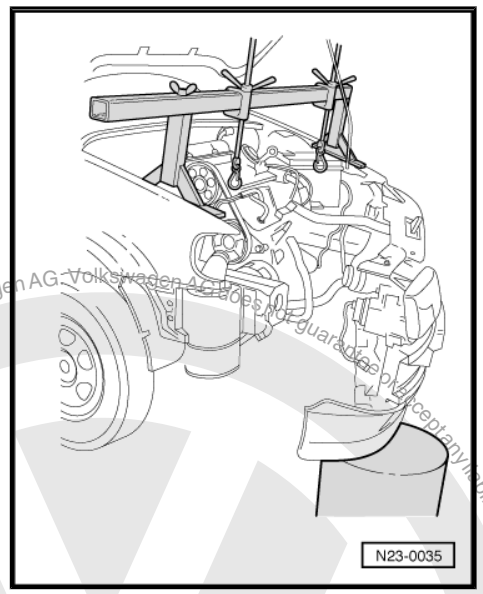

– Loosen nuts on belt tensioner -arrow-.

– Remove bracket from cylinder block.

– Remove toothed belt from camshaft and injection pump toothed belt sprockets.

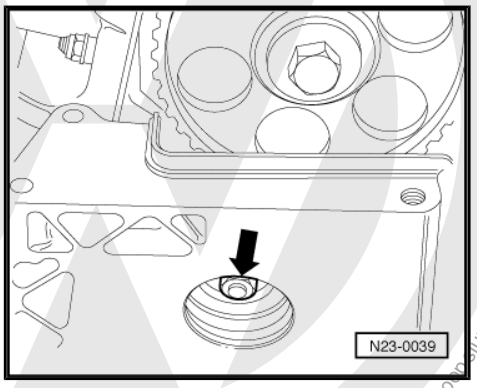

– Lock injection pump sprocket with locking pin -2064- .

– Unscrew injection pump sprocket securing nut.

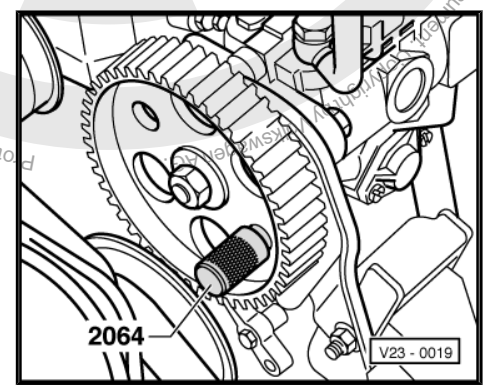

Protected by copyright. Copying for private or commercial purposes, in part or in whole, is not permitted unless authorised by Volkswagen AG. Volkswagen AG does not guarantee or accept any liability with respect to the correctness of information in this document. Copyright by Volkswagen AG.
salettronica

– Loosen puller -3032- arms and position puller -3032- .
– Align arms with bores on injection pump sprocket and tighten.
– Tension injection pump sprocket with puller -3032- .
– By tapping lightly on spindle of puller -3032- -arrow-, loosen injection pump sprocket from injection pump taper (hold sprocket to prevent it from falling down).
– Unscrew all fuel lines from pump.

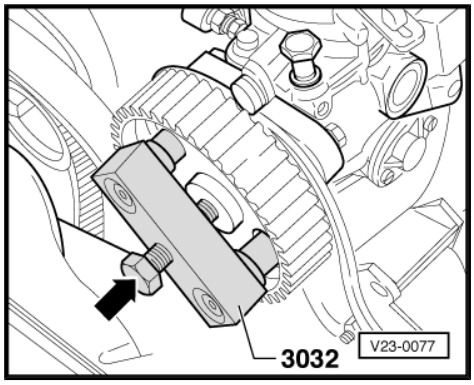

Note

♦ *Use ring spanner -3035- to release injection pipes.*
♦ *Do not alter shape.*

– Cover openings with a clean cloth.
– Disconnect 10-pin injection pump connector and unclip connector from retainer.

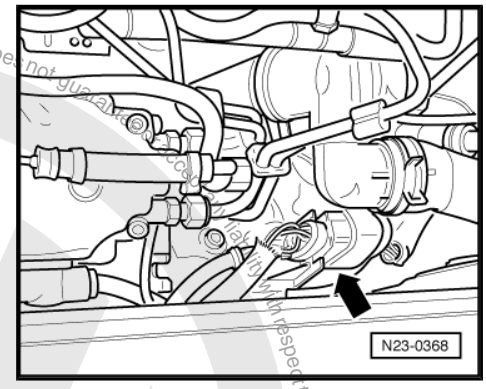

– Unscrew securing bolts and nuts from console -arrows-.

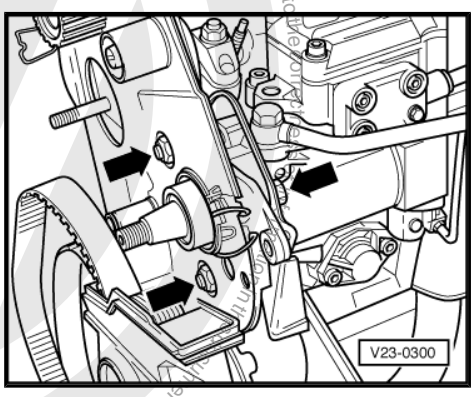

– Then remove securing bolt from rear support -arrow-.
– Take off injection pump.

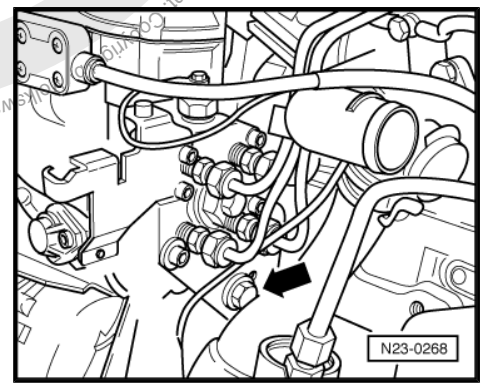

Installing

– Insert injection pump into console and then tighten securing bolt on rear support with conical nut first.
– Align injection pump to central position in console elongated holes and secure hand-tight.

Note

Commencement of injection is set dynamically using fault reader -V.A.G 1551- .

Protected by copyright. Copying for private or commercial purposes, in part or in whole, is not permitted unless authorised by Volkswagen AG. Volkswagen AG does not guarantee the accuracy and completeness of this electronic copy with respect to the original paper version.

satelettronica

– Install injection pump sprocket and lock with locking pin -2064- . When installing observe spring washer seating.
– Tighten securing nut to 55 Nm.

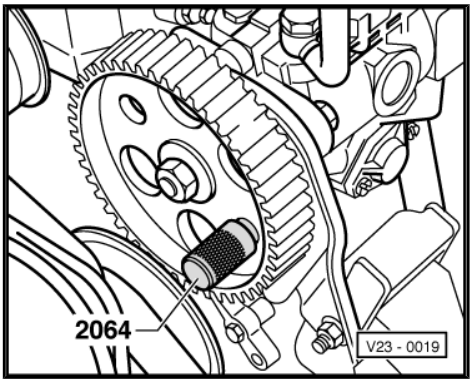

– Loosen securing bolt of camshaft sprocket half a turn. To loosen securing bolt of camshaft sprocket, secure with counterhold -3036- .

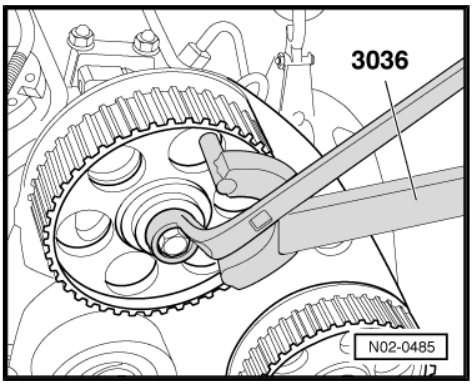

Note

To loosen and tighten camshaft sprocket, never use adjustment bar -2065 A- as a counterhold! Use counterhold -3036- .

– Release camshaft pulley from taper on camshaft by striking on punch (positioned through hole in toothed belt guard) with in a blow from a hammer.
– Take off camshaft sprocket.
– Check whether TDC mark on flywheel and reference mark are aligned.
– Place tooth belt on injection pump pulley and tensioning roller.
– Fit camshaft sprocket into toothed belt and secure sprocket to camshaft so that the sprocket can still turn.
– Install guide roller. Specified torque: 25 Nm.
– Remove locking pin -2064- from injection pump sprocket.

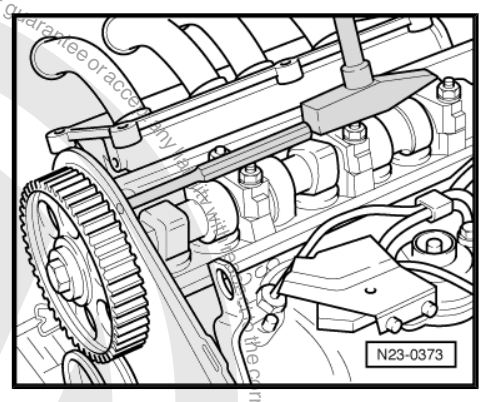

Protected by copyright. Copying for private or commercial purposes, in part or in whole, is not permitted unless authorised by Volkswagen AG. Volkswagen AG does not guarantee or accept any liability with respect to the correctness of information in this document. Copyright by Volkswagen AG.
satelettronica

– Turn belt tensioner to right with pin wrench -3387- until notch and protrusion -arrows- are positioned opposite each other.

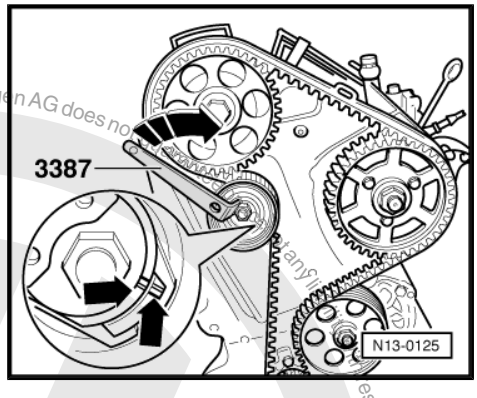

Note

If eccentric has been turned too far, tensioning roller must be completely relieved of tension and retensioned again. The eccentric should not be turned back just the amount it was turned too far.

– Tighten clamping nut on tensioning roller. Specified torque: 20 Nm

– Again check whether TDC mark on flywheel and reference mark are aligned.

– Tighten camshaft sprocket securing bolt. Specified torque: 45 Nm

– Remove adjustment bar -2065 A- from camshaft.

– Turn crankshaft two rotations in engine direction of rotation until crankshaft is set to TDC No. 1 cylinder again.

– Check if the

♦ TDC mark on flywheel is correctly positioned

♦ the adjustment bar -2065 A- is fitted in the camshaft

♦ the locking pin -2064- is locked into the injection pump pulley

♦ the setting for the tensioning roller (notch/protrusion) is correct.

– If notch and protrusion are not located opposite each other, retension belt tensioner. To do this, hold belt tensioner with pin wrench -3387- , loosen securing nut, continue turning eccentric clockwise until notch and protrusion are located opposite each other and tighten securing nut to 20 Nm.

– Turn crankshaft two rotations in engine direction of rotation until crankshaft is set to TDC No. 1 cylinder again.

– Repeat check.

– Connect injection pipes, fuel supply line and electrical lines.

Fill injection pump with diesel as follows.

– Screw adapter set -V.A.G 1318/10-12- into injection pump return aperture.

– Connect hand vacuum pump with accessories -V.A.G 1390/- to adapter with approx. 1 m transparent plastic hose.

– Operate vacuum pump until fuel flows out of return aperture. Do not draw fuel into vacuum pump.

– Remove adapter and connect fuel return line.

– Fit engine mounting bracket to cylinder block. Specified torque: 45 Nm

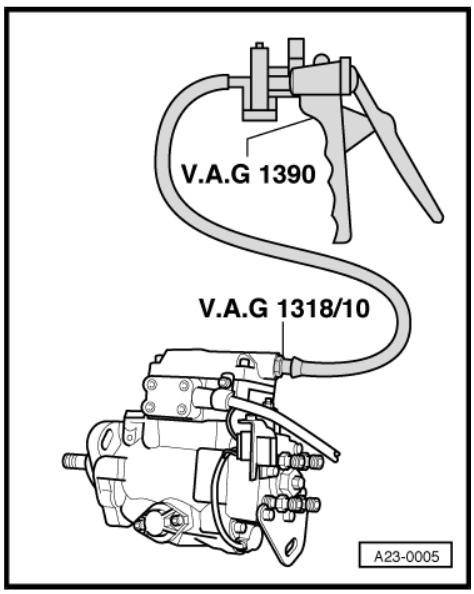

satelettronica

– Install engine assembly mounting.

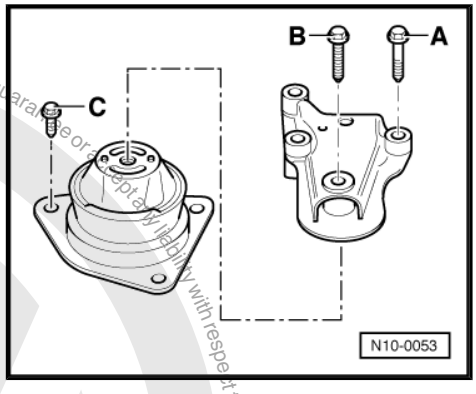

Note

Expansion bolts must not be reused.

A = 40 Nm + $^1/_4$ turn (90°) further, B = 50 Nm, C = 20 Nm + $^1/_8$ turn (45°) further

– Install toothed belt guard, cylinder head cover and connecting hose.

– Install lock carrier with attaching parts: ⇒ General body repairs, exterior; Rep. Gr. 50 ; Removing and installing lock carrier with attaching parts .

– Dynamically check commencement of injection and adjust if necessary ⇒ page 55 .

1.7 Dynamically checking and adjusting commencement of injection

Special tools and workshop equipment required

♦ Ring spanner -3035-

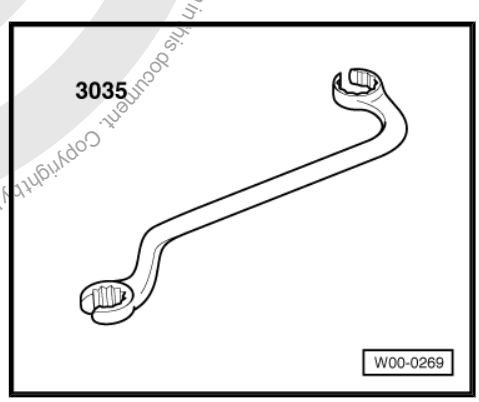

♦ Torque wrench -V.A.G 1331-

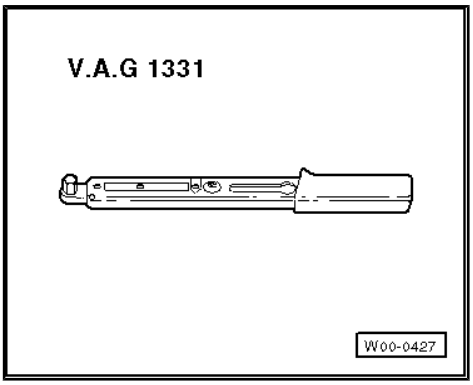

♦ Fault reader -V.A.G 1551- or vehicle system tester -V.A.G 1552- with diagnosis cable -V.A.G 1551/3-

Note

♦ *Dynamically checking and correcting commencement of injection is only possible in function 04 "Engine basic setting".*

♦ *Commencement of injection must always be checked, and if necessary adjusted, after renewing the toothed belt or loosening the injection pump bolts or toothed belt pulleys.*

Protected by copyright. Copyright by Volkswagen AG.
This document is authorised by Volkswagen AG. Volkswagen AG does not guarantee or accept any liability with respect to the correctness of information in this document. Copyright by Volkswagen AG.
This document is a part of the whole, not permitted unless authorised by Volkswagen AG. Volkswagen AG does not guarantee or accept any liability with respect to the correctness of information in this document. Copyright by Volkswagen AG.
satelettronica

Test and adjustment prerequisites

- Mechanical engine basic setting OK.
- Toothed belt tension OK.

Procedure

– Connect fault reader -V.A.G 1551- or vehicle system tester -V.A.G 1552- and select engine electronics control unit with “address word” 01. Engine must be idling. (Connecting fault reader -V.A.G 1551- and selecting engine electronics control unit ⇒ page 2).

Indicated on display:

```
Rapid data transfer                HELP
Select function XX
```

– Press keys 0 and 4 for function “Initiate basic settings” and confirm entry with Q key.

Indicated on display:

```
Basic setting
Input display group number XXX
```

– Press 0 key three times for “display group number 0” and confirm entry with Q key.

Indicated on display: (1...10 = display zones)

```
System in basic setting 0                  ->
  1   2   3   4   5   6   7   8   9   10
```

– Check coolant temperature in display zone 7.

Specification: Less than 73 (corresponds to 85°C)

Continue with check only if coolant temperature is achieved.

Commencement of injection in display zone 2 is dependant on fuel temperature in display zone 9.

Engine code AGD

A - Display zone 2: Commencement of injection

B - Display zone 9: Fuel temperature

C - Specified range for commencement of injection

Example

Numerical value 90 in display zone 9 -B- corresponds to a numerical value range of 41..78 in display zone 2 -A-.

Engine code AKU

A - Display zone 2: Commencement of injection

B - Display zone 9: Fuel temperature

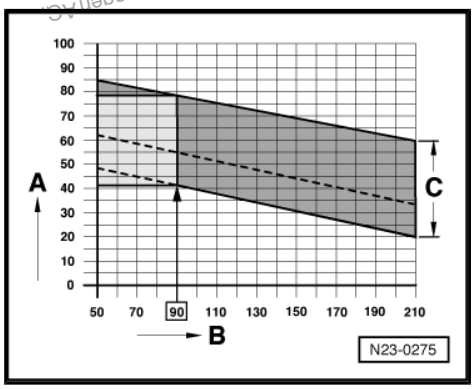

Protected by copyright. Copying for private or commercial purposes, in part or in whole, is not permitted unless authorised by Volkswagen AG. Volkswagen AG does not guarantee or accept any liability with respect to the correctness of information in this document. Copyright by Volkswagen AG.

satelettronica

C - Specified range for commencement of injection

Example

Numerical value 90 in display zone 9 -B- corresponds to a numerical value range of 40..79 in display zone 2 -A-.

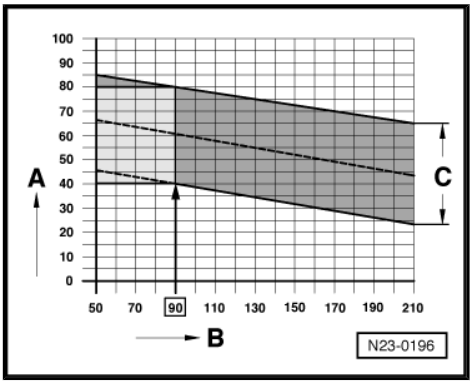

Continuation for all engine codes

Note

- *If the commencement of injection is advanced, turn injection pump in direction of engine rotation; if the commencement of injection is retarded, turn counter to direction of engine rotation.*
- *If, when checking the commencement of injection, the specifications are within zone -C- then no readjustment is required. After repairs, e.g. removing and installing injection pump, adjusting timing, the commencement of injection must be set to the mean valve (dashed line) of specification zone -C-.*

If the commencement of injection lies outside of the specification range, adjust commencement of injection as follows:

– Remove upper toothed belt guard.
– Loosen injection pump securing bolts approx. one turn, leaving the easiest bolt to reach till last.
– Hold injection pump by hand under tension in direction to be adjusted.
– Carefully loosen last securing bolt until the pump can be turned slightly and then retighten securing bolt.
– Observe value in display zone 2 and, if necessary, adjust again until the mean value for specification zone -C- is displayed.
– Tighten injection pump securing bolts to 25 Nm.
– Check commencement of injection again.
– Press [→] key.
– Press keys [0] and [6] for function “End output” and confirm entry with [Q] key.
– Switch off ignition.

Note

Loosen and retighten (25 Nm) the injection pipes on the injection pump after dynamically adjusting the injection pump. This relieves the strain on pipes and prevents vibration fatigue fractures.

1.8 Checking timing

Protected by copyright. Copying for private or commercial purposes, in part or in whole, is not permitted unless authorised by Volkswagen AG. Volkswagen AG does not guarantee or accept any liability with respect to the correctness of information in this document. Copyright by Volkswagen AG.
satelettronica

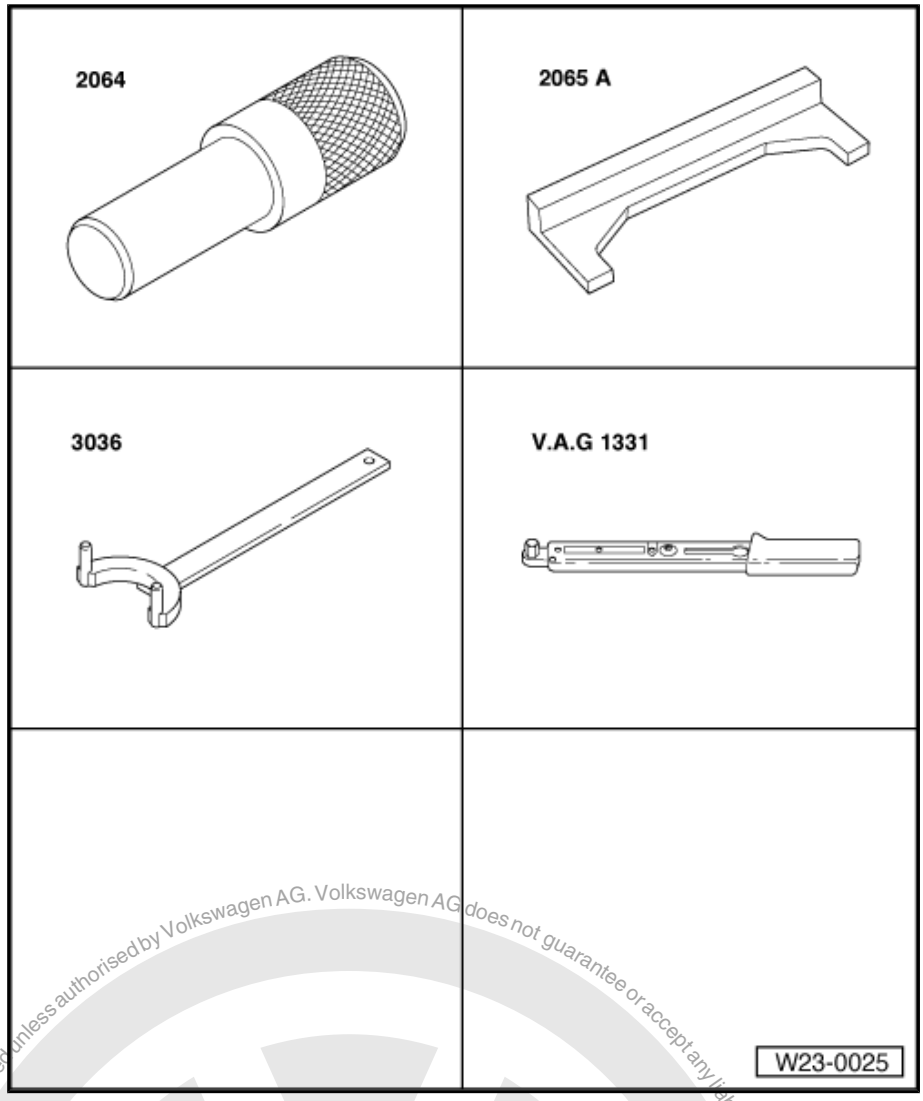

Special tools and workshop equipment required

- Locking pin -2064-
- Adjustment bar -2065 A-
- Counterhold tool -3036-
- Torque wrench -V.A.G 1331-
- Drift
- Feeler gauges

Test procedure

– Remove upper toothed belt guard and cylinder head cover.

– Check toothed belt tension.

Protected by copyright. Copying for private or commercial purposes, in part or on whole, is not permitted unless authorised by Volkswagen AG. Volkswagen AG does not guarantee or accept any liability with respect to the correctness of information in this document. Copyright by Volkswagen AG.
satelettronica

– Set engine to TDC for cylinder No. 1 -arrow-. Adjustment bar -2065 A- must fit into recess in camshaft. If adjustment bar -2065 A- cannot be inserted, adjust timing as follows.

– Rotate crankshaft so that adjustment bar -2065 A- can be inserted.

– Align adjustment bar -2065 A- as follows: Turn locked camshaft until one end of the adjustment bar -2065 A- contacts cylinder head. Use feeler gauge to measure clearance which has arisen at other end of adjustment bar -2065 A- . Insert a feeler gauge with half of the clearance dimension between adjustment bar -2065 A- and cylinder head. Now turn camshaft until adjustment bar -2065 A- contacts the feeler gauge. Insert a 2nd feeler gauge of same dimension at the other end between adjustment bar -2065 A- and cylinder head.

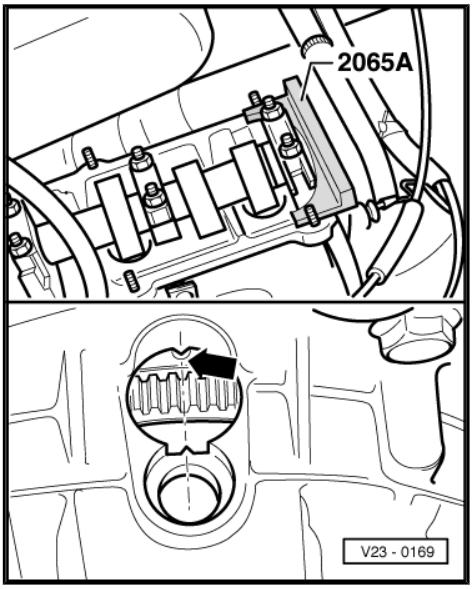

– Loosen securing bolt of camshaft sprocket half a turn. To loosen securing bolt of camshaft sprocket, secure with counterhold -3036- .

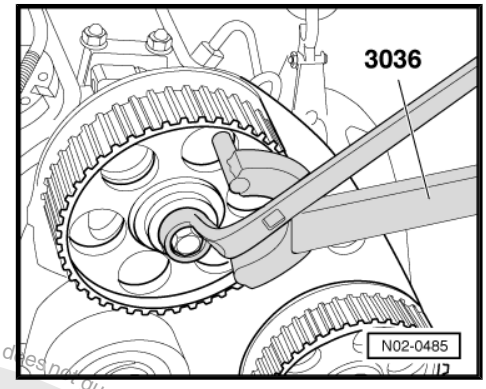

Note

To loosen and tighten camshaft sprocket, never use adjustment bar -2065 A- as a counterhold! Use counterhold -3036- .

– Release camshaft pulley from taper on camshaft by striking on punch (positioned through hole in toothed belt guard) with in a blow from a hammer.

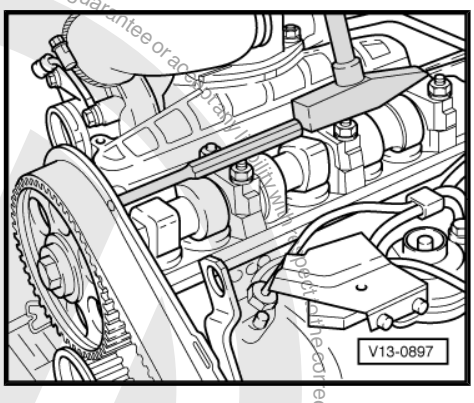

– Lock injection pump sprocket with locking pin -2064- .

– Check TDC position of crankshaft. Flywheel TDC marking must align with cast lug on clutch housing.

– Remove locking pin -2064- from injection pump sprocket.

– Tighten camshaft sprocket securing bolt.

Specified torque: 45 Nm

– Remove adjustment bar -2065 A- from camshaft.

– Install toothed belt guard and cylinder head cover.

– Dynamically check commencement of injection and adjust if necessary ⇒ page 55 .

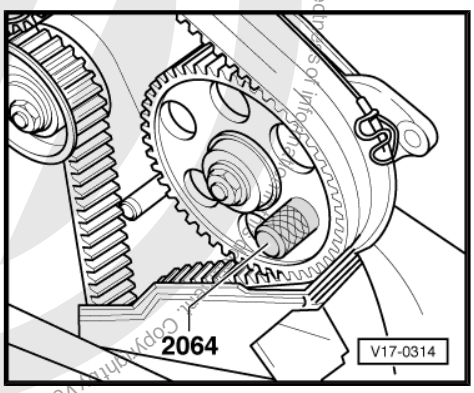

Protected by copyright. Copying for private or commercial purposes, in part or in whole, is not permitted unless authorised by Volkswagen AG. Volkswagen AG does not guarantee or accept any liability with respect to the correctness of information in this document. Copyright by Volkswagen AG.
satelettronica

1.9 Removing and installing injectors

Special tools and workshop equipment required

- Ring spanner -3035-

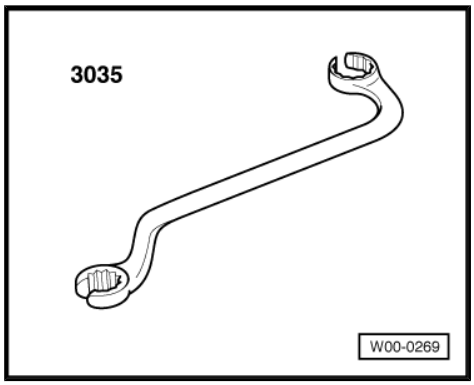

- Torque wrench -V.A.G 1331- -V.A.G 1331-

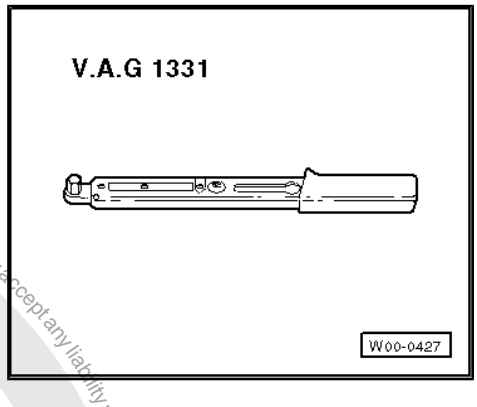

Defective injectors cause the following faults:

- Misfiring
- Knocking in one or more cylinders
- Engine over-heating
- Loss of power
- Excessive black exhaust smoke
- Higher fuel consumption
- Excessive blue smoke when starting from cold

Defective injectors can be located by loosening the injector pipe unions in turn with the engine running at a fast idling speed. If engine speed remains constant after loosening a pipe union, this indicates a defective injector.

Removing

– Remove injection lines with ring spanner -3035- .

Note

Always remove pipe set complete. Do not alter shape.

– Remove securing nut, take off retainer and take out injector.

Protected by copyright. Copying for private or commercial purposes, in part or in whole, is not permitted unless authorised by Volkswagen AG. Volkswagen AG does not guarantee or accept any liability with respect to the correctness of information in this document. Copyright by Volkswagen AG.

satelettronica

Installing

Note

Always renew heat insulating seal between cylinder head and injectors.

– Insert injector.
– Check mounting brackets are seated correctly in cylinder head.
– Fit retainer.

Specified torques:

Injection lines = 25 Nm.

Retainer bolt = 20 Nm.

1.10 Checking injectors

These engines are equipped with dual spring injectors. The fuel injected therefore occurs in 2 stages. If faults occur with these injectors then they are to be exchanged as neither repairs nor pressure setting is possible.

Special tools and workshop equipment required

♦ Injector tester -V.A.G 1322- with pressure hose Pressure hose -V.A.G 1322/2-

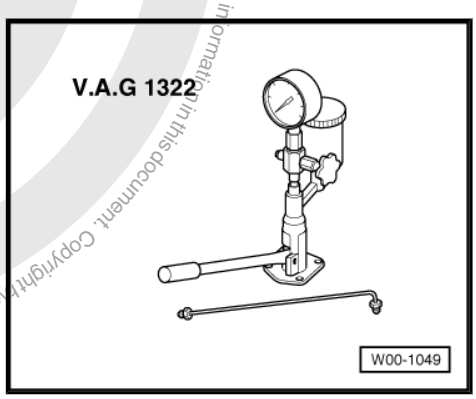

Test prerequisite

• Pressure gauge on

1.10.1 Checking injection pressure

WARNING

When testing injectors ensure that the jet of fuel does not contact the hands as the high pressure will cause the fuel to penetrate the skin and may cause severe injuries.

– Remove injectors ⇒ page 60 .

Protected by copyright. Copying for private or commercial purposes, in part or in whole, is not permitted unless authorised by Volkswagen AG. Volkswagen AG does not guarantee or accept any liability with respect to the correctness of information in this document. Copyright by Volkswagen AG.
satelettronica

– Connect injector to injector test unit.

– Press pump lever down slowly. Read off spray pressure at commencement of spraying. If spray pressure deviates from specification, renew injectors.

Specifications: (Pressure) new injectors: 190 ... 200 bar Wear limit: 170 bar

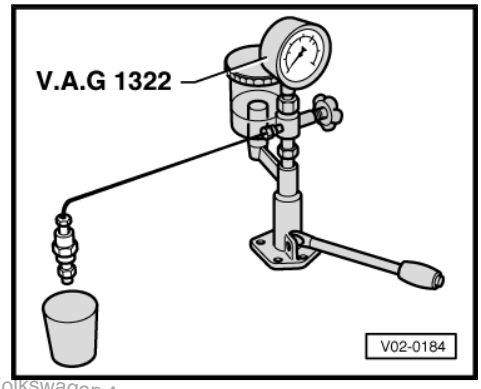

1.10.2 Checking for leaks

– Move pump lever down slowly and maintain a pressure of approx. 150 bar for 10 seconds. No fuel should leak from the nozzle tip.

– If injector leaks, replace.

1.11 Sealing injection pump

1.11.1 Sealing quantity adjuster

Special tools and workshop equipment required

♦ Torque wrench -V.A.G 1331-

♦ Additional bracket -T10108/1-

♦ Triangular wrench -T 10366-

♦ Vehicle diagnosis, testing and information system -VAS 5051-

– Determine the quantity injected by the injection pump as follows:

Test prerequisites

Mechanical engine basic setting OK.

Toothed belt tension OK (camshaft drive toothed belt) ⇒ 4-cyl. diesel engine, mechanical system; Rep. Gr. 15 ; Removing and installing, tensioning toothed belt

Coolant temperature must be at least 80 °C.

Procedure

– Connect vehicle diagnosis, testing and information system -VAS 5051- ⇒ page 2 . When doing this the engine must be running at idling speed.

– Select “self-diagnosis” operating mode.

– Press “Engine electronics” key on display.

– Select “Read measured value block” key on display.

– Select “1 - Display group 1” on keypad in display.

– Viewed from top, observe value in second position. (corresponds to 2.2...9 mg/stroke).

– Note injected quantity value.

– Remove injection pump ⇒ page 48 .

– Dismantle union for return ⇒ Item 7 (page 46) and drain injection pump by holding it with return bore pointing downwards. Catch escaping fuel.

Protected by copyright. Copying for private or commercial purposes, in part or in whole, is not permitted unless authorised by Volkswagen AG. Volkswagen AG does not guarantee or accept any liability with respect to the correctness of information in this document. Copyright by Volkswagen AG.
satelettronica

Protected by copyright. Copying for private or commercial purposes, in part or in whole, is not permitted unless authorised by Volkswagen AG. Volkswagen AG does not guarantee or accept any liability with respect to the correctness of information in this document. Copyright by Volkswagen AG.

- Attach additional bracket -T10108/1- to injection pump flange and tighten bolts -A- to 20 Nm.
- Via additional bracket -T10108/1- , secure injection pump in vice.

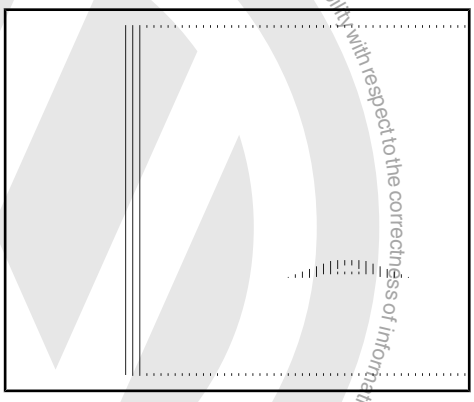

- Mark position of quantity adjuster versus pump housing with a scriber mark -arrow-.
- Remove cable from fuel shut-off valve -N109- ⇒ page 66 incl. bracket.
- Unscrew bolts -A-.

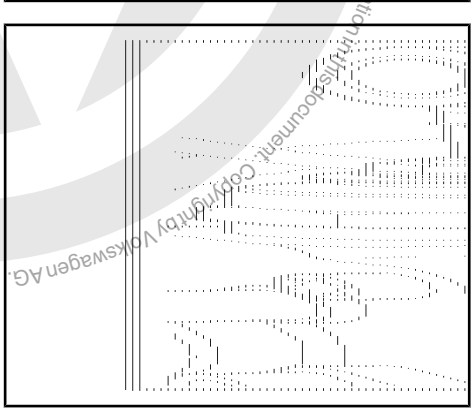

- Unscrew special bolt -B- with triangular wrench -T 10366- .
- Swivel quantity adjuster completely to side.

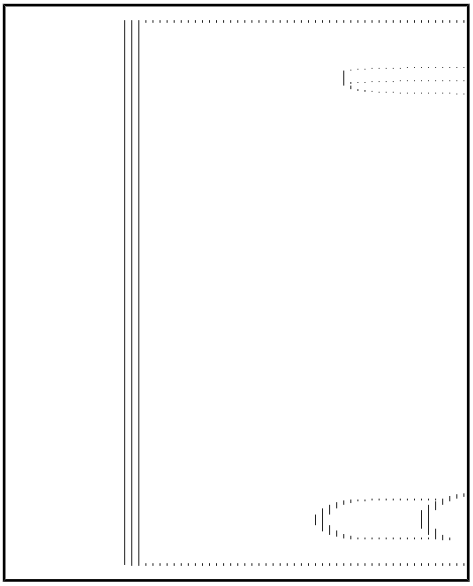

Note

Pay attention to corrosion and deposits in area of flange.

satelettronica

– Carefully lever old seal from seat and renew. Ensure “lug” -arrow- is seated correctly.

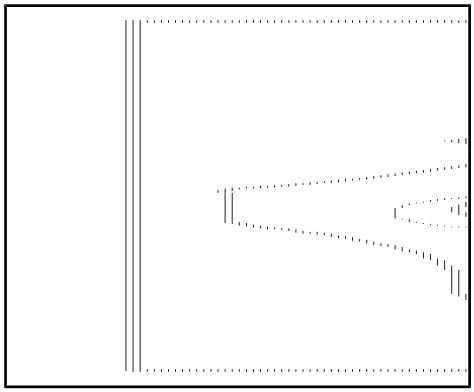

– Carefully position quantity adjuster onto injection pump.

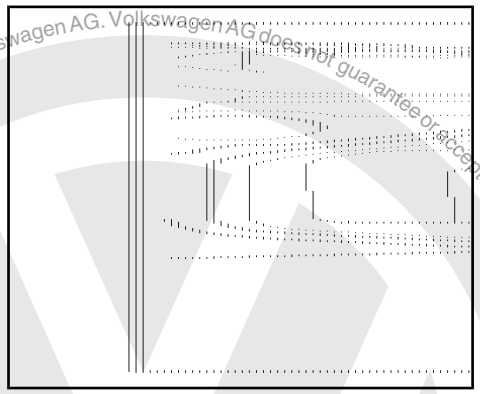

Caution

Ensure that ball stud of quantity adjuster -1- engages properly in recess of quantity slide valve -2-.

– Loosely tighten quantity adjuster securing bolts hand-tight.
– Bring quantity adjuster to “scriber mark”.
– Tighten securing bolts -omit special bolt- diagonally to 9 Nm.
– Unscrew quantity adjuster cover securing bolts and remove cover.

Note

Pay attention to corrosion and deposits in area of flange.

– Carefully lever old seal from seat and renew. Ensure “lug” -arrow- is seated correctly.
– Position cover onto injection pump.
– Position securing bolts and tighten to 9 Nm.
– Install union for return ⇒ Item 7 (page 46) and tighten to 27 Nm.
– Install injection pump ⇒ page 48 and fill via return line using diesel extractor -VAS 5226- .

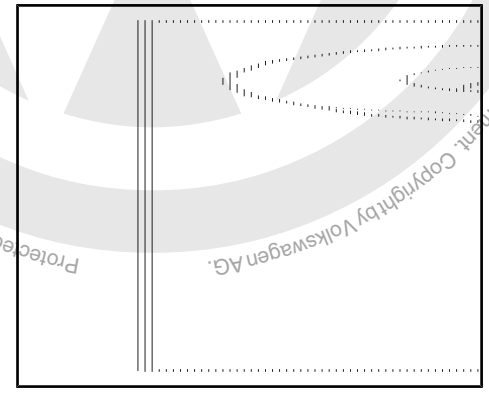

Note

After loosening quantity adjuster, quantity injected must be checked and corrected if necessary ⇒ page 64 .

1.11.2 Checking and adjusting quantity injected

Special tools and workshop equipment required

♦ Vehicle diagnosis, testing and information system -VAS 5051-

Test prerequisites

Mechanical engine basic setting OK.

Protected by copyright. Copying for private or commercial purposes, in part or in whole, is not permitted unless authorised by Volkswagen AG. Volkswagen AG does not guarantee or accept any liability with respect to the correctness of information in this document. Copyright by Volkswagen AG.
satelettronica

Toothed belt tension OK (camshaft drive toothed belt) ⇒ 4-cyl. diesel engine, mechanical system; Rep. Gr. 15 ; Removing and installing, tensioning toothed belt

Coolant temperature must be at least 80 °C.

Procedure

– Connect vehicle diagnosis, testing and information system - VAS 5051- ⇒ page 2 . When doing this the engine must be running at idling speed.

– Select “self-diagnosis” operating mode.

– Press “Engine electronics” key on display.

– Select “Read measured value block” key on display.

– Select “1 - Display group 1” on keypad in display.

– Viewed from top, observe value in second position. (corresponds to 2.2...9 mg/stroke).

– Note injected quantity value.

Note

Injection pump must be reset to the previously noted injection quantity value.

– Viewed from top, observe value in second position: (Corresponds to 2.2...9 mg/stroke) or noted value.

If the specification is not achieved:

– Loosen quantity adjuster securing bolts max. $^1/_4$ turn.

– Observe injected quantity value on display and shift quantity adjuster in necessary direction by tapping gently with a plastic hammer:

♦ Towards toothed belt sprocket: Quantity injected increases.

♦ Towards distributor head: Quantity injected decreases.

– After achieving specification, tighten quantity adjuster securing bolts to 9 Nm.

1.11.3 Sealing distributor head

Special tools and workshop equipment required

♦ Torque wrench -V.A.G 1331-

♦ Additional bracket -T10108/1-

– Remove injection pump ⇒ page 48 .

– Dismantle union for return ⇒ Item 7 (page 46) and drain injection pump by holding it with return bore pointing downwards. Catch escaping fuel.

– Attach additional bracket -T10108/1- to injection pump flange and tighten bolts to 20 Nm.

Protected by copyright. Copying for private or commercial purposes, in part or in whole, is not permitted unless authorised by Volkswagen AG. Volkswagen AG does not guarantee or accept any liability with respect to the correctness of information in this document. Copyright by Volkswagen AG.
satelettronica

– Secure injection pump in vice as shown.
– Remove retaining plate -A-.
– Remove cable from fuel shut-off valve -N109- incl. bracket -B-.

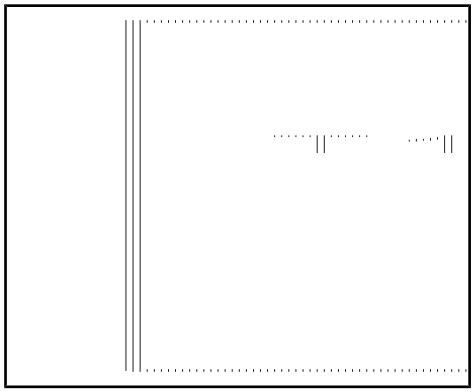

– Carefully loosen distributor head securing bolts -arrows- diagonally and remove bolts.

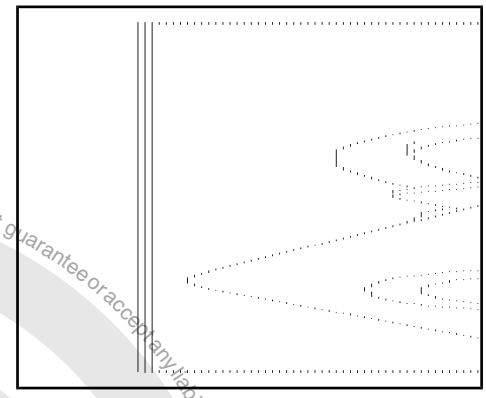

> **Caution**
>
> *Never pull distributor head out upwards, as pressure rollers otherwise fall into injection pump housing and repair is then impossible. Injection pump must be renewed in this case.*

– Remove visible, old seal -arrow- by carefully pulling from seat and opening using a suitable tool. Do not scratch sealing surface.
– First position new seal behind fuel shut-off valve -N109- , then pull carefully over distributor head and allow to roll into groove.

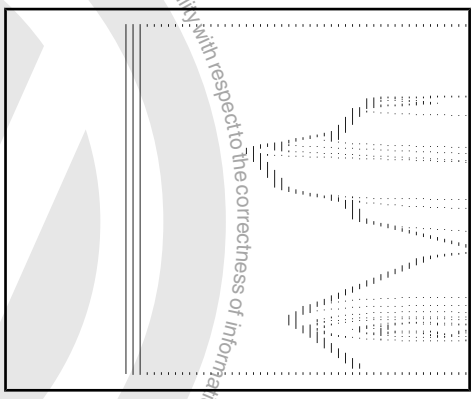

> **Caution**
>
> *Subsequent tightening of distributor head securing bolts must be carried out in small steps under all circumstances, as distributor head may otherwise tilt within injection pump. In this case, the renewed seal is immediately damaged and leaking again!*

– Position securing bolts and carefully and diagonally bolt distributor head back into position in very small steps.
– Tighten securing bolts to 12 Nm.
– Bolt retaining plate and cable of fuel shut-off valve -N109- back on.
– Install injection pump ⇒ page 48 and fill via return line using diesel extractor -VAS 5226- .

1.11.4 Sealing injection timing device cover

– Place a clean cloth under the injection pump.

satelettronica

– Remove cover screws -1- with commercially available key for Torx socket head bolts, e.g. Hazet 2115-T30 .
– Remove cover -2- and clean it.
– Renew O-ring -3- and install cover with existing shims -4-.

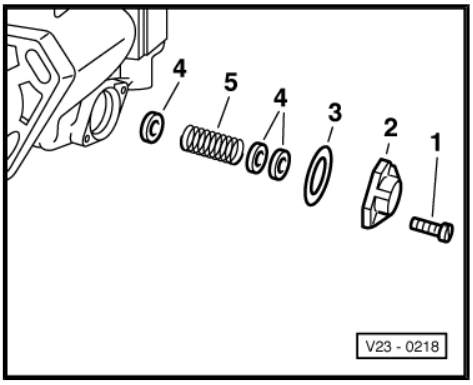

Protected by copyright. Copying for private or commercial purposes, in part or in whole, is not permitted unless authorised by Volkswagen AG. Volkswagen AG does not guarantee or accept any liability with respect to the correctness of information in this document. Copyright by Volkswagen AG.
satelettronica

2 Checking components and functions

2.1 Checking voltage supply for diesel direct injection system

Special tools and workshop equipment required

- ♦ Hand multimeter -V.A.G 1526C- or multimeter -V.A.G 1715-
- ♦ Adapter set -V.A.G 1594C-
- ♦ Adapter cable, 121-pin -V.A.G 1598/31-
- ♦ Current flow diagram

Test prerequisites

- Fuses must be OK.
- Earth connections in plenum chamber OK.
- The battery voltage must be at least 11.5 V.
- All electrical consumers, e.g. lights and rear window heating, must be switched off.

Test procedure

– Remove engine control unit ⇒ page 94 , Renewing engine control unit.

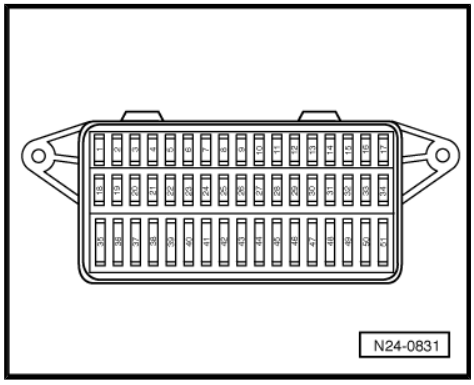

– Connect adapter cable, 121-pin -V.A.G 1598/31- to wiring harness and engine control unit.

– Measure voltage between following sockets: 1/2 and 4/5 37 and 4/5

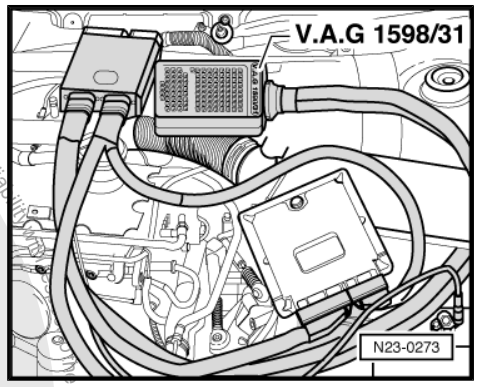

Specification: approx. 0.0 V

– Switch on ignition.

– Again measure voltage between following sockets: 1/2 and 4/5 37 and 4/5

Specification: approx. battery voltage

If the specifications are not attained:

– Check terminal 30 voltage supply relay -J317- : ⇒ Current flow diagrams, Electrical fault finding and Fitting locations

– Check cable connections for open circuit, short circuit and transfer resistance at contacts according to current flow diagram.

If no fault is found in wiring and relay:

– Renew engine control unit ⇒ page 94 .

2.2 Checking engine speed sender -G28-

Engine speed sender -G28- is speed and reference mark sender. The engine will not start if there is no speed signal. If the speed signal fails when the engine is running, it will cause the engine to stall immediately.

Special tools and workshop equipment required

- ♦ Hand multimeter -V.A.G 1526C- or multimeter -V.A.G 1715-

satelettronica

- Adapter set -V.A.G 1594C-
- Adapter cable, 121-pin -V.A.G 1598/31-
- Current flow diagram

Test procedure

– Disconnect black 3-pin connector to engine speed sender -G28- -arrow-.

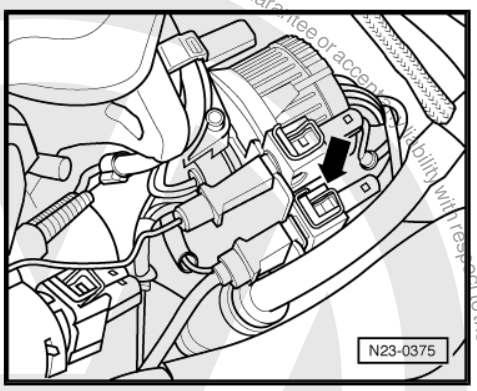

– Measure resistance between connector contacts 1+2.

Specification: 1.1…1.6 kΩ

– Check the sender for short-circuit between contacts 1 + 3 as well as 2 + 3.

Specification: ∞ Ω.

If the specifications are not attained:

– Renew engine speed sender -G28- : ⇒ Engine mechanical system; Rep. Gr. 13 ; Dismantling and assembling engine

– Read fault memory, if necessary, repair any faults and then clear fault memory ⇒ page 7 , Reading and clearing fault memory.

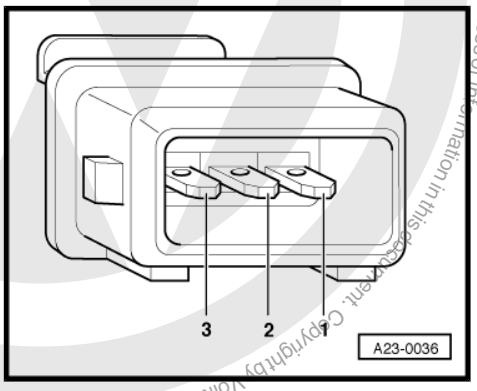

If no sender fault is detected:

– Connect adapter cable, 121-pin -V.A.G 1598/31- to control unit wiring harness. The engine control unit remains disconnected.

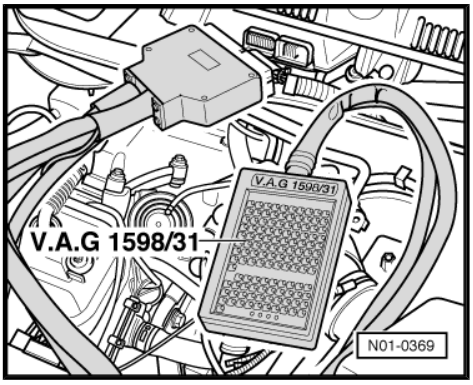

– Check wiring between 121-pin adapter cable -V.A.G 1598/31- and 3-pin connector for open circuit according to current flow diagram. Contact 1 + socket 102 Contact 2 + socket 110 Contact 3 + socket 86

Cable resistance: max. 1.5 Ω.

– Check cables at 3-fold connector for short circuit to one another according to current flow diagram.

Specification: ∞ Ω.

If no fault in lines is detected:

– Renew engine control unit ⇒ page 94 .

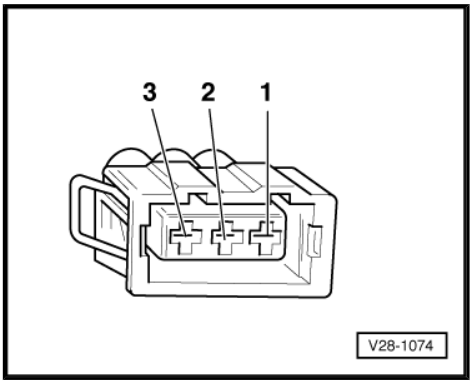

Protected by copyright. Copyright by Volkswagen AG. Volkswagen AG does not guarantee or accept any liability with respect to the correctness of information in this document. Copyright by Volkswagen AG. Protected by copyright. Copying for private or commercial purposes, in part or in whole, is not permitted unless authorised by Volkswagen AG.
satelettronica

2.3 Checking coolant temperature sender -G62-

Special tools and workshop equipment required

- Hand multimeter -V.A.G 1526C- or multimeter -V.A.G 1715-
- Fault reader -V.A.G 1551- or vehicle system tester -V.A.G 1552- with diagnosis cable -V.A.G 1551/3-
- Adapter set -V.A.G 1594C-
- Adapter cable, 121-pin -V.A.G 1598/31-
- Current flow diagram

Test prerequisite

- Engine must be cold.

Test procedure

– Connect fault reader -V.A.G 1551- or vehicle system tester -V.A.G 1552- and select engine electronics control unit with “address word” 01. Engine must be idling. (Connecting fault reader -V.A.G 1551- and selecting engine electronics control unit ⇒ page 2).

Indicated on display:

```
Rapid data transfer                      HELP
Select function XX
```

– Press keys [0] and [8] for function “Read measured value block” and confirm entry with [Q] key.

Indicated on display:

```
Read measured value block
Input display group number XXX
```

– Press keys [0], [0] and [7] for “Display group number 7” and confirm entry with [Q] key.

– Indicated on display:

```
Read measured value block 7             ->
15.4°C           15.9°C        16.7°C
```

– Check coolant temperature value in display zone 4. The temperature value must Increase uniformly and without interruption.

– In case of faults the fuel temperature or - 4.5 °C is displayed as a substitute.

– Press [→] key.

– Press keys [0] and [6] for function “End output” and confirm entry with [Q] key.

– Switch off ignition.

– If no realistic display appears in display zone 4, or either the fuel temperature or -4.5°C is displayed as a substitute, check coolant temperature sender -G62- and line connections to sender as follows:

Protected by copyright. Copying for private or commercial purposes, in part or in whole, is not permitted unless authorised by Volkswagen AG. Volkswagen AG does not guarantee or accept any liability with respect to the correctness of information in this document. Copyright by Volkswagen AG.

sateletronica

– Pull 4-pin connector off coolant temperature sender -G62- with coolant temperature gauge sender -G2- -arrow-.

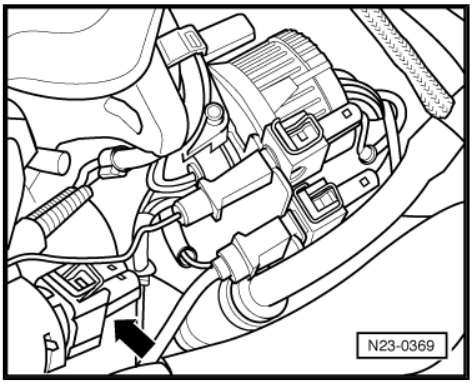

– Perform resistance measurement on coolant temperature sender -G62- contact 1 (earth) and 3 (signal).

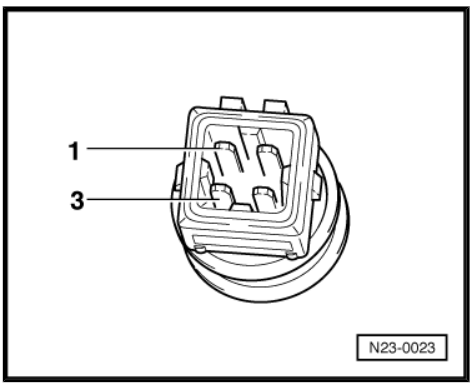

Specification see diagram.

Scale A shows resistance values for temperature range 0...50 °C and scale B the values for temperature range 50...100 °C.

Examples:

♦ 30 °C corresponds to a resistance of 1500..2000 Ω

♦ 80 °C corresponds to a resistance of 275..375 Ω

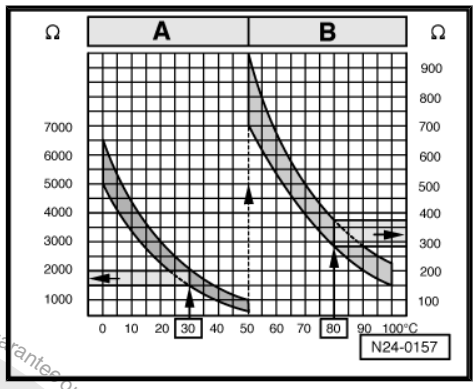

If the specification is not achieved:

– Renew the coolant temperature sender -G62- .

– Read fault memory, if necessary, repair any faults and then clear fault memory ⇒ page 7 , Reading and clearing fault memory.

If the specification is attained:

– Connect adapter cable, 121-pin -V.A.G 1598/31- to control unit wiring harness. The engine control unit remains disconnected.

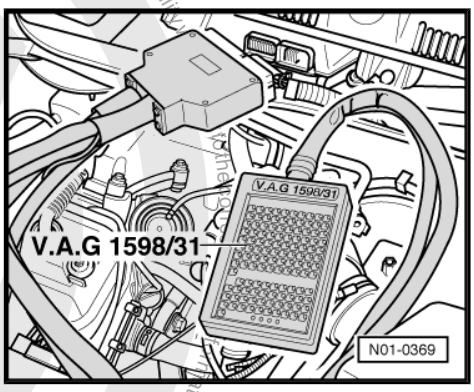

Protected by copyright. Copying for private or commercial purposes, in part or in whole, is not permitted unless authorised by Volkswagen AG. Volkswagen AG does not guarantee or accept any liability with respect to the correctness of information in this document. Copyright by Volkswagen AG.
satelettronica

– Check wiring between 121-pin adapter cable -V.A.G 1598/31- and 4-pin connector for open circuit according to current flow diagram. Contact 1 + socket 104 Contact 3 + socket 112

Cable resistance: max. 1.5 Ω.

– Also check wiring for short to one another, short to vehicle earth and short to battery positive.

Specification: ∞ Ω.

If no fault in lines is detected:

– Renew engine control unit ⇒ page 94 .

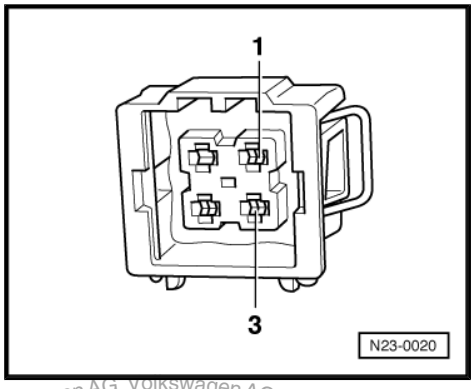

2.4 Checking intake manifold temperature sender -G72-

Special tools and workshop equipment required

- Hand multimeter -V.A.G 1526C- or multimeter -V.A.G 1715-
- Fault reader -V.A.G 1551- or vehicle system tester -V.A.G 1552- with diagnosis cable -V.A.G 1551/3-
- Adapter set -V.A.G 1594C-
- Adapter cable, 121-pin -V.A.G 1598/31-
- Current flow diagram

Test procedure

– Connect fault reader -V.A.G 1551- or vehicle system tester -V.A.G 1552- and select engine electronics control unit with “address word 01”. Engine must be idling. (Connecting fault reader -V.A.G 1551- and selecting engine electronics control unit ⇒ page 2).

Indicated on display:

```
Rapid data transfer                    HELP
Select function XX
```

– Press keys 0 and 8 for function “Read measured value block” and confirm entry with Q key.

Indicated on display:

```
Read measured value block

Input display group number XXX
```

– Press keys 0, 0 and 7 for “Display group number 7” and confirm entry with Q key.

Indicated on display:

```
Read measured value block 7            ->
15.4°C            15.9°C        16.7°C
```

– Check intake manifold temperature value in display zone 3. The temperature value must be approx. ambient temperature.

– If a fault is present, a constant intake manifold temperature of approx.136.8°C is displayed.

– Press → key.

– Press keys 0 and 6 for function “End output” and confirm entry with Q key.

– Switch off ignition.

– If no realistic display appears in display zone 3 or a substitute temperature of 136.8°C is displayed, check intake manifold temperature sender -G72- and line connections to sender as follows:

Protected by copyright. Copying for private or commercial purposes, in part or in whole, is not permitted unless authorised by Volkswagen AG. Volkswagen AG does not guarantee or accept any liability with respect to the correctness of information in this document. Copyright by Volkswagen AG.
satelettronica

– Pull 2-pin connector off intake manifold temperature sender -G72- -arrow-.

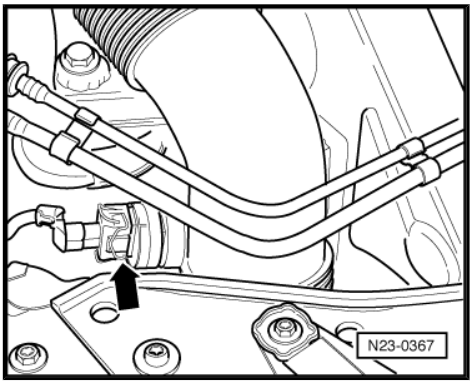

– Measure resistance between sender contacts.

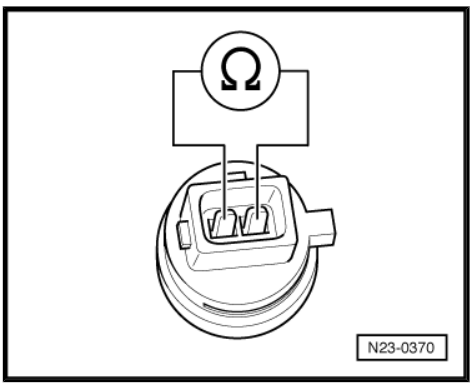

Specification see diagram.

Scale A shows resistance values for temperature range 0...50 °C and scale B the values for temperature range 50...100 °C.

Examples:

- ♦ 30 °C corresponds to a resistance of 1500..2000 Ω
- ♦ 80 °C corresponds to a resistance of 275..375 Ω

If the specification is not achieved:

– Renew intake manifold temperature sender -G72- .

– Read fault memory, if necessary, repair any faults and then clear fault memory ⇒ page 7 , Reading and clearing fault memory.

If the specification is attained:

– Connect adapter cable, 121-pin -V.A.G 1598/31- to control unit wiring harness. The engine control unit remains disconnected.

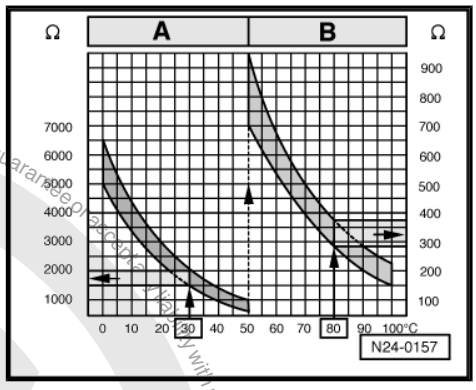

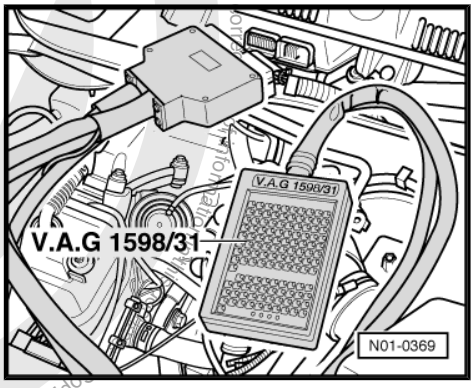

Protected by copyright. Copying for private or commercial purposes, in part or in whole, is not permitted unless authorised by Volkswagen AG. Volkswagen AG does not guarantee or accept any liability with respect to the correctness of information.
Copyright by Volkswagen AG.
satelettronica

– Check wiring between adapter cable, 121-pin -V.A.G 1598/31- and connector for open circuit referring to current flow diagram. Contact 1 + socket 73 Contact 2 + socket 54.

Cable resistance: max. 1.5 Ω.

– Also check wiring for short to one another, short to vehicle earth and short to battery positive.

Specification: ∞ Ω.

If no fault in lines is detected:

– Renew engine control unit ⇒ page 94 .

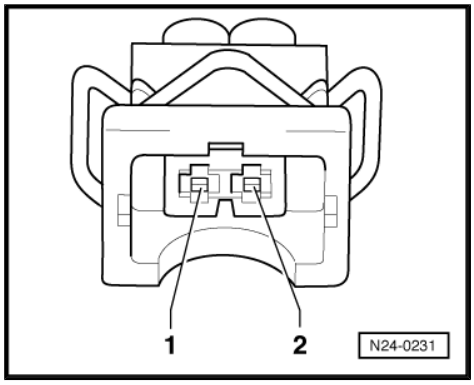

2.5 Checking fuel temperature sender - G81-

Special tools and workshop equipment required

- Hand multimeter -V.A.G 1526C- or multimeter -V.A.G 1715-
- Fault reader -V.A.G 1551- or vehicle system tester -V.A.G 1552- with diagnosis cable -V.A.G 1551/3-
- Adapter set -V.A.G 1594C-
- Adapter cable, 121-pin -V.A.G 1598/31-
- Current flow diagram

Test procedure

– Connect fault reader -V.A.G 1551- or vehicle system tester -V.A.G 1552- and select engine electronics control unit with “address word” 01. Engine must be idling. (Connecting fault reader -V.A.G 1551- and selecting engine electronics control unit ⇒ page 2).

Indicated on display:

```
Rapid data transfer                HELP
Select function XX
```

– Press keys 0 and 8 for function “Read measured value block” and confirm entry with Q key.

Indicated on display:

```
Read measured value block

Input display group number XXX
```

– Press keys 0, 0 and 7 for “Display group number 7” and confirm entry with Q key.

Indicated on display:

```
Read measured value block 7          ->
15.4°C          15.9°C       16.7°C
```

– Check fuel temperature value in display zone 1. The temperature value must be approx. ambient temperature.

– If a fault is present, a constant fuel temperature of -5.4°C is displayed.

– Press → key.

– Press keys 0 and 6 for function “End output” and confirm entry with Q key.

– Switch off ignition.

– If no realistic display appears in display zone 1 or a substitute temperature of -5.4 °C is displayed, check fuel temperature sender -G81- and wiring to sender as follows:

Protected by copyright. Copyright by Volkswagen AG. Volkswagen AG does not guarantee or accept any liability with respect to the correctness of information in this document. Copying for private or commercial purposes, in part or in whole, is not permitted unless authorised by Volkswagen AG.
satelettronica

– Disconnect 10-pin connector for fuel temperature sender -G81- (connector to injection pump quantity adjuster).

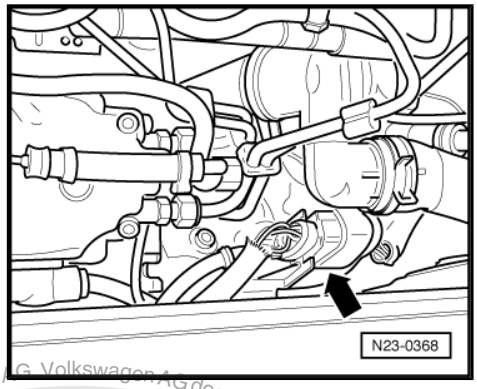

– Measure sender resistance at connector contacts 4+7.

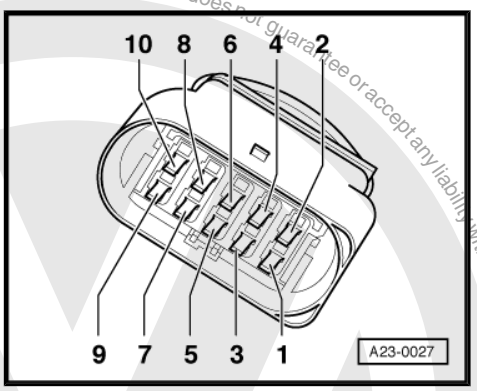

Specification see diagram.

Scale A shows resistance values for temperature range 0...50 °C and scale B the values for temperature range 50...100 °C.

Examples:

- ♦ 30 °C corresponds to a resistance of 1500..2000 Ω
- ♦ 80 °C corresponds to a resistance of 275..375 Ω

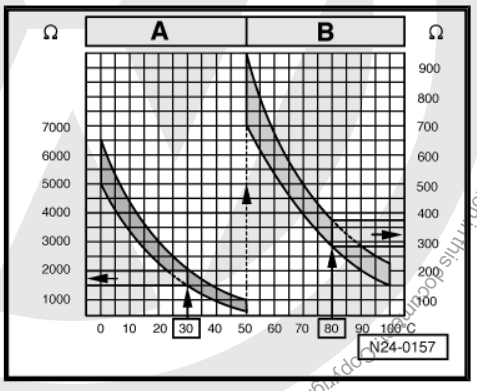

If the specification is not achieved:

– Renew injection pump ⇒ page 48 , Removing and installing injection pump.

– Read fault memory, if necessary, repair any faults and then clear fault memory ⇒ page 7 , Reading and clearing fault memory.

If the specification is attained:

– Connect adapter cable, 121-pin -V.A.G 1598/31- to control unit wiring harness. The engine control unit remains disconnected.

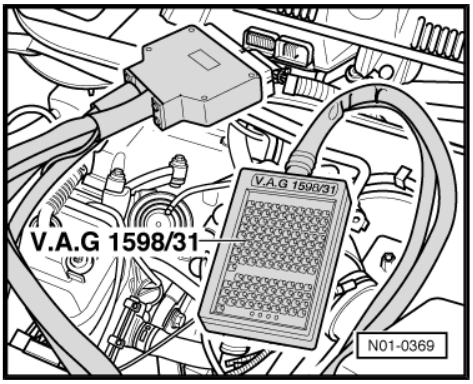

Protected by copyright. Copying for private or commercial purposes, in part or in whole, is not permitted unless authorised by Volkswagen AG. Volkswagen AG does not guarantee or accept any liability with respect to the correctness of information in this document. Copyright by Volkswagen AG.
satelettronica

– Check wiring between adapter cable, 121-pin -V.A.G 1598/31- and connector for open circuit referring to current flow diagram. Contact 4 + socket 103 Contact 7 + socket 111.

Cable resistance: max. 1.5 Ω.

– Also check wiring for short to one another, short to vehicle earth and short to battery positive.

Specification: ∞ Ω.

If no fault in lines is detected:

– Renew engine control unit ⇒ page 94 .

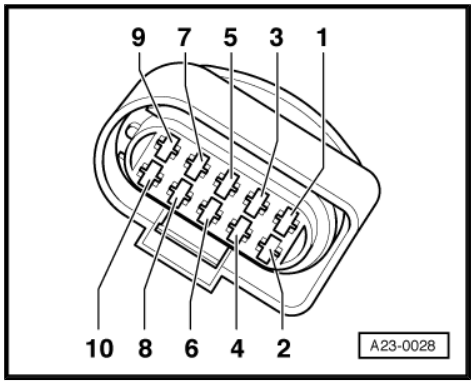

2.6 Checking modulating piston movement sender -G149- and metering adjuster -N146-

The metering adjuster -N146- is an electromagnetic swivelling positioner which is actuated by the control unit via a specific duty cycle. The eccentric shaft on the metering adjuster -N146- moves the modulating piston on the high-pressure piston and thereby determines the quantity of fuel injected.

The modulating piston movement sender -G149- informs the control unit of the position of the quantity adjuster -N146- and therefore stipulates the amount injected.

Special tools and workshop equipment required

- Hand multimeter -V.A.G 1526C- or multimeter -V.A.G 1715-
- Fault reader -V.A.G 1551- or vehicle system tester -V.A.G 1552- with diagnosis cable -V.A.G 1551/3-
- Adapter set -V.A.G 1594C-
- Adapter cable, 121-pin -V.A.G 1598/31-
- Current flow diagram

Test procedure

– Connect fault reader -V.A.G 1551- or vehicle system tester -V.A.G 1552- and select engine electronics control unit with “address word 01”. Engine must be idling. (Connecting fault reader -V.A.G 1551- and selecting engine electronics control unit ⇒ page 2).

Indicated on display:

```
Rapid data transfer                    HELP
Select function XX
```

– Press keys 0 and 8 for function “Read measured value block” and confirm entry with Q key.

Indicated on display:

```
Read measured value block

Input display group number XXX
```

– Press keys 0, 0 and 1 for “Display group number 1” and confirm entry with Q key.

Indicated on display:

```
Read measured value block 1            ->
880 rpm    6.5 mg/
stroke     1.680 V     87.3°C
```

– Check coolant temperature in display zone 4. Specification: At least 85°C

Continue with check only if coolant temperature is achieved.

satelettronica

– Check voltage of modulating piston movement sender -G149- in display zone 3.

```
Read measured value block 1
     ->
880 rpm    6.5 mg/
stroke     1.680 V    87.3°C
```

Engine code AGD

Specification: 1.400…1.800 V

Engine code AKU

Specification: 1.500…2.100 V

Continuation for all engine codes

– Press [→] key.

– Press keys [0] and [6] for function “End output” and confirm entry with [Q] key.

– Switch off ignition.

– If specification is not achieved, check modulating piston movement sender -G149- and metering adjuster -N146- as described in following:

2.6.1 Checking modulating piston movement sender -G149-

– Disconnect 10-pin connector for modulating piston movement sender -G149- (connector to injection pump quantity adjuster).

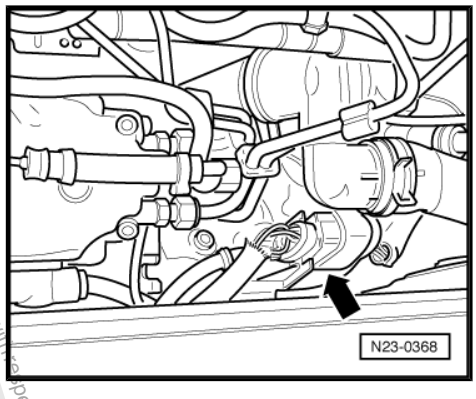

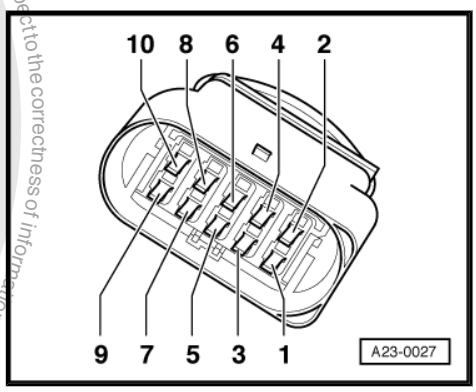

– Measure resistance between connector contacts 1 + 2 and 2 + 3.

Specification: 4.9...7.5 Ω

If the specification is not achieved:

– Renew injection pump ⇒ page 48 , Removing and installing injection pump.

– Read fault memory, if necessary, repair any faults and then clear fault memory ⇒ page 7 , Reading and clearing fault memory.

If the specification is attained:

Protected by copyright. Copyright by Volkswagen AG.
Copyright by Volkswagen AG. Volkswagen AG does not guarantee or accept any liability with respect to the correctness of information in this document.
Copying for private or commercial purposes, in part or in whole, is not permitted unless authorised by Volkswagen AG.
satelettronica

Protected by copyright. Copyright by Volkswagen AG. Volkswagen AG does not guarantee or accept any liability with respect to the correctness of information in this document. Copyright by Volkswagen AG. Protected by copyright. Copying for private or commercial purposes, in part or in whole, is not permitted unless authorised by Volkswagen AG.

– Connect adapter cable, 121-pin -V.A.G 1598/31- to control unit wiring harness. The engine control unit remains disconnected.

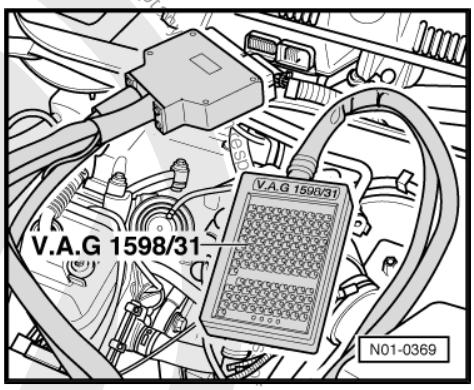

– Check wiring between adapter cable, 121-pin -V.A.G 1598/31- and connector for open circuit referring to current flow diagram. Contact 1 + socket 108 Contact 2 + socket 106 Contact 3 + socket 99.

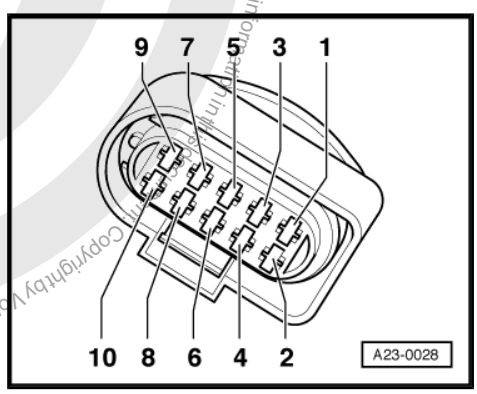

Cable resistance: max. 1.5 Ω.

– Also check wiring for short to one another, short to vehicle earth and short to battery positive.

Specification: ∞ Ω.

If no fault in lines is detected:

– Renew engine control unit ⇒ page 94 .

2.6.2 Checking metering adjuster -N146-

– Disconnect 10-pin connector (connector to injection pump quantity adjuster).

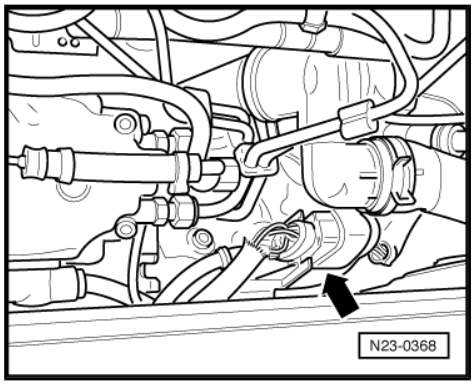

– Measure resistance between connector contacts 5+6.

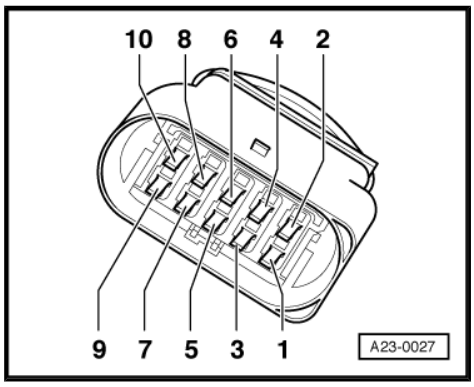

Specification: 0.5...2.5 Ω

If the specification is not achieved:

– Renew injection pump ⇒ page 48 , Removing and installing injection pump.

– Read fault memory, if necessary, repair any faults and then clear fault memory ⇒ page 7 , Reading and clearing fault memory.

If the specification is attained:

satelettronica

– Connect adapter cable, 121-pin -V.A.G 1598/31- to control unit wiring harness. The engine control unit remains disconnected.

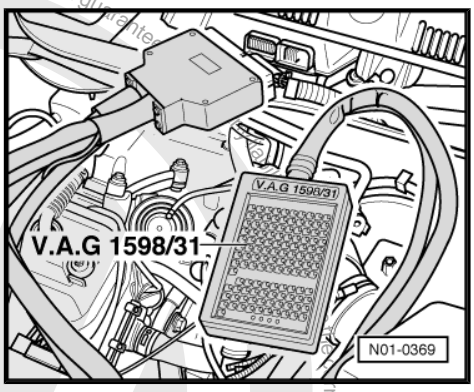

– Check wiring between adapter cable, 121-pin -V.A.G 1598/31- and connector for open circuit referring to current flow diagram. Contact 5 + socket 1 Contact 5 + socket 2 Contact 6 + socket 116 Contact 6 + socket 121.

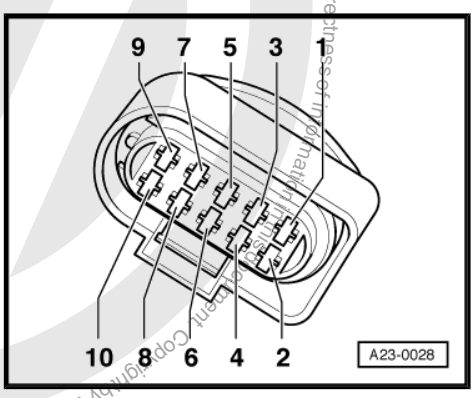

Cable resistance: max. 1.5 Ω.

– Also check wiring for short to one another, short to vehicle earth and short to battery positive.

Specification: ∞ Ω.

If no fault in lines is detected:

– Renew engine control unit ⇒ page 94 .

2.7 Checking needle lift sender -G80-

The needle lift sender signal is required to determine the commencement of injection. If it fails, the commencement of injection switches to open-loop control (depending on engine speed and load). During normal operation, the commencement of injection is controlled by a closed-loop function (depending on engine speed, load and temperature).

Special tools and workshop equipment required

- Hand multimeter -V.A.G 1526C- or multimeter -V.A.G 1715-
- Adapter set -V.A.G 1594C-
- Adapter cable, 121-pin -V.A.G 1598/31-
- Current flow diagram

Test procedure

– Disconnect 2-pin connector for needle lift sender -G80- -arrow-.

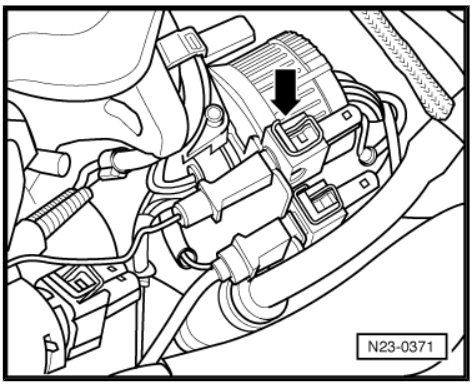

satelettronica

– Measure resistance between connector contacts.

Specification: 80.0…120.0 Ω

If the specification is not achieved:

– Renew No. 3 cylinder injector with needle lift sender -G80- ⇒ Item 14 (page 47) .

If the specification is attained:

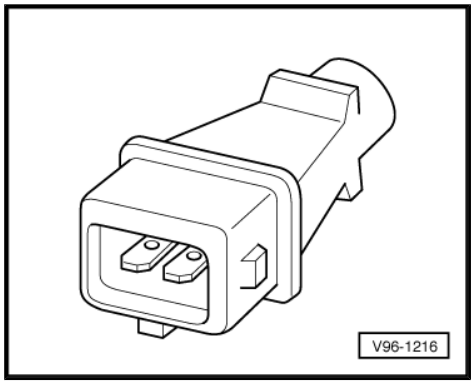

– Connect adapter cable, 121-pin -V.A.G 1598/31- to control unit wiring harness. The engine control unit remains disconnected.

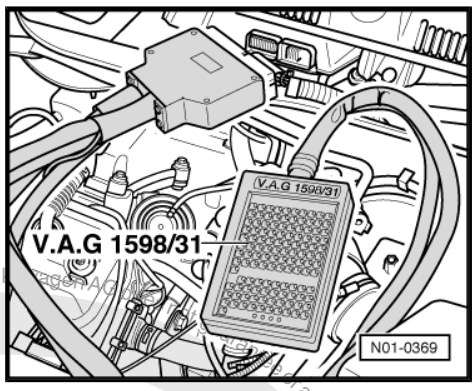

– Check wiring between adapter cable, 121-pin -V.A.G 1598/31- and connector for open circuit referring to current flow diagram. Contact 1 + socket 109 Contact 2 + socket 101.

Cable resistance: max. 1.5 Ω.

– Also check wiring for short to one another, short to vehicle earth and short to battery positive.

Specification: ∞ Ω.

If no fault in lines is detected:

– Renew engine control unit ⇒ page 94 .

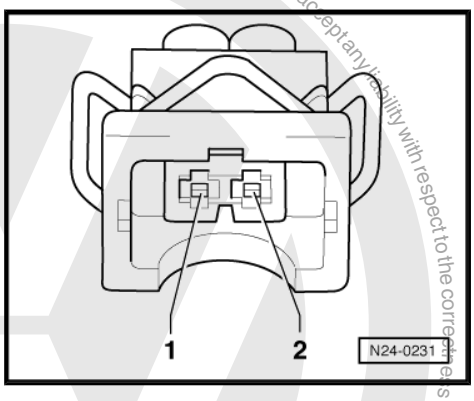

2.8 Checking injection timing device control range

Checking the injection timing device control range is carried out in function 04 (Basic settings). Using this procedure the commencement of injection valve -N108- is pulsed so that the extremity values for advanced (early) and retarded (late) positions for the injection timing device can be read in display zone 3 of measured value block 4.

Special tools and workshop equipment required

- Hand multimeter -V.A.G 1526C- or multimeter -V.A.G 1715-
- Fault reader -V.A.G 1551- or vehicle system tester -V.A.G 1552- with diagnosis cable -V.A.G 1551/3-
- Adapter set -V.A.G 1594C-
- Adapter cable, 121-pin -V.A.G 1598/31-
- Current flow diagram

Protected by copyright. Copyright by Volkswagen AG.
Copyright by Volkswagen AG. Volkswagen AG does not accept any liability with respect to the correctness of information in this document.
Copyright by Volkswagen AG. Volkswagen AG does not permit unless authorised by Volkswagen AG. Volkswagen AG
for commercial purposes, in part or in whole, is not permitted unless authorised by Volkswagen AG.
satelettronica

Test procedure

– Connect fault reader -V.A.G 1551- or vehicle system tester -V.A.G 1552- and select engine electronics control unit with “address word 01”. Engine must be idling.

Indicated on display:

```
Rapid data transfer                  HELP
Select function XX
```

– Press keys [0] and [4] for function “Initiate basic settings” and confirm entry with [Q] key.

Indicated on display:

```
Basic setting
Input display group number XXX
```

– Press keys [0], [0] and [4] for “Display group number 4” and confirm entry with [Q] key.

Indicated on display:

```
System in basic setting 4           ->
900 rpm    advanced     7.9° BTDC   66%
```

Specification in display zone 3: Advanced 7.0...9.0° BTDC

After approx. 10 seconds the timing device is moved to the retarded (late) position.

Indicated on display:

```
System in basic setting 4           ->
900 rpm    retarded     3.9° BTDC   74%
```

Specification in display zone 3: Retarded 3.0...5.0° BTDC

– Press [→] key.

– Press keys [0] and [6] for function “End output” and confirm entry with [Q] key.

– Switch off ignition.

If the specifications are not attained:

– Check commencement of injection valve -N108- as follows:

– Disconnect 10-pin connector for commencement of injection valve -N108- (connector to injection pump quantity adjuster).

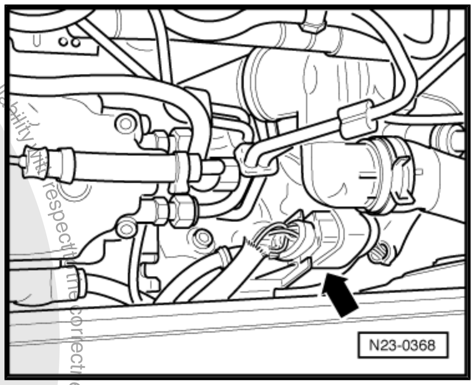

– Measure resistance between connector contacts 9+10.

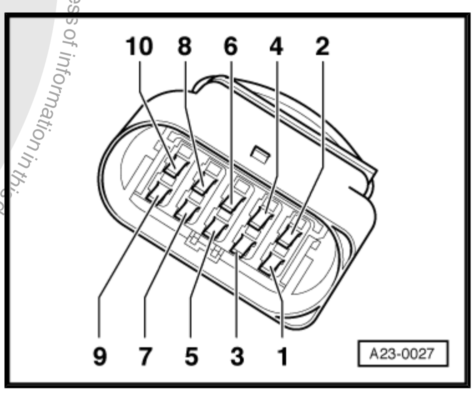

Specification: 12.0…20.0 Ω

If the specification is not achieved:

– Renew commencement of injection valve -N108- ⇒ Item 17 (page 47) .

– Read fault memory, if necessary, repair any faults and then clear fault memory ⇒ page 7 , Reading and clearing fault memory.

If the specification is attained:

Protected by copyright. Copying for private or commercial purposes, in part or in whole, is not permitted unless authorised by Volkswagen AG. Volkswagen AG does not guarantee or accept any liability with respect to the correctness of information in this document. Copyright by Volkswagen AG.
sateletronica

– Connect adapter cable, 121-pin -V.A.G 1598/31- to control unit wiring harness. The engine control unit remains disconnected.

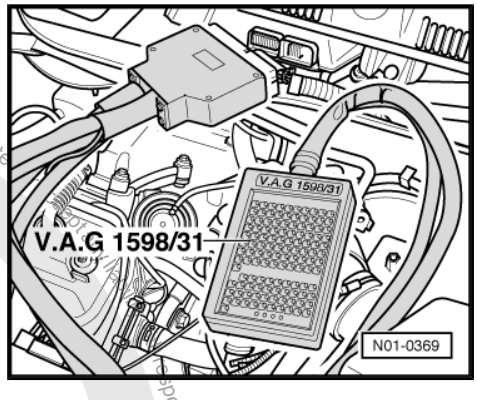

– Check lines between adapter cable, 121-pin -V.A.G 1598/31- and 10-pin connector for open circuit according to current flow diagram. Contact 9 + socket 114 Contact 10 + socket 1 Contact 10 + socket 2.

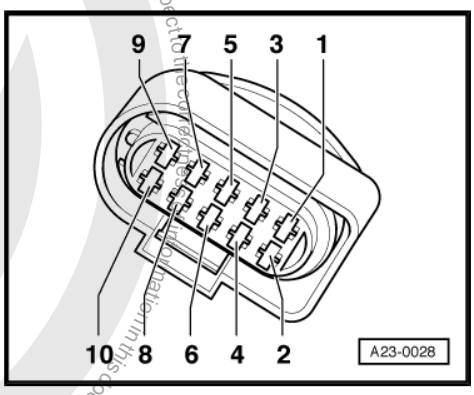

Cable resistance: max. 1.5 Ω.

– Also check wiring for short to one another, short to vehicle earth and short to battery positive.

Specification: ∞ Ω.

If no fault in lines is detected:

– Renew engine control unit ⇒ page 94 .

2.9 Checking intake manifold flap changeover

Function

At low engine speeds the depression in the intake manifold is insufficient to guarantee a perfect function of the exhaust gas recirculation system. After starting the engine, the throttle valve is therefore closed up to an engine speed of approx. 2200 rpm to increase the vacuum.

Special tools and workshop equipment required

♦ Hand vacuum pump with accessories -V.A.G 1390/-

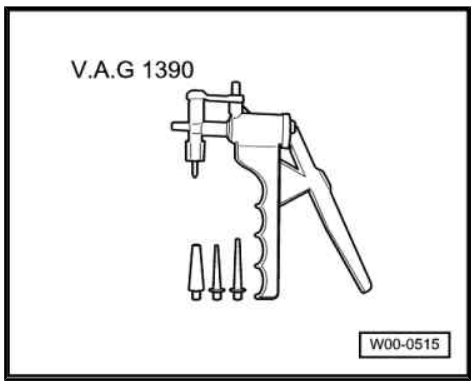

satelettronica

- Spring-type clip pliers -VAS 5024 A-

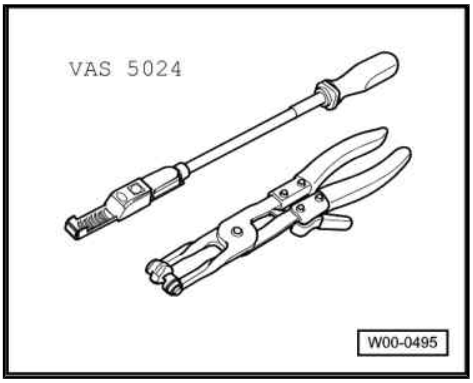

Checking function

– Remove air filter/inlet connection connecting hose from inlet connection.

– Start engine and run at idling speed.

– Observe position of intake manifold flap (2nd person required). Intake manifold flap must close approx. 3 seconds after starting engine.

– Switch off ignition. Intake manifold flap must open after switching off ignition.

If change-over does not take place as described:

– Connect hand vacuum pump with accessories -V.A.G 1390/- to intake manifold flap vacuum unit -1-.

– Operate hand vacuum pump with accessories -V.A.G 1390/- . Intake manifold flap must close to stop and remain closed.

If the specification is not achieved:

Check intake manifold flap change-over mechanics for freedom of movement. To do this, operate intake manifold flap by hand.

– Check that vacuum lines are connected correctly.

If a fault is found in the mechanical components:

– Renew inlet connection ⇒ page 47 , Removing and installing inlet connection.

If no fault is found in the mechanical components:

– Check variable intake manifold flap change-over valve -N239- ⇒ page 83 .

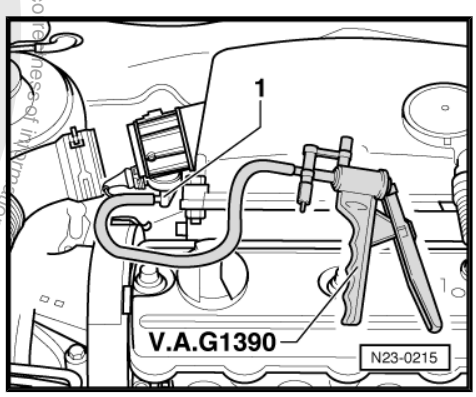

2.10 Checking variable intake manifold flap change-over valve -N239-

Special tools and workshop equipment required

- Hand multimeter -V.A.G 1526C- or multimeter -V.A.G 1715-
- Adapter set -V.A.G 1594C-
- Adapter cable, 121-pin -V.A.G 1598/31-
- Current flow diagram

Protected by copyright. Copying for private or commercial purposes, in part or in whole, is not permitted unless authorised by Volkswagen AG. Volkswagen AG does not guarantee or accept any liability with respect to the correctness of information in this document. Copyright by Volkswagen AG.
satelettronica

Test prerequisites

- Fuses must be OK.
- The battery voltage must be at least 11.5 V.
- All electrical consumers, e.g. lights and rear window heating, must be switched off.

Test procedure

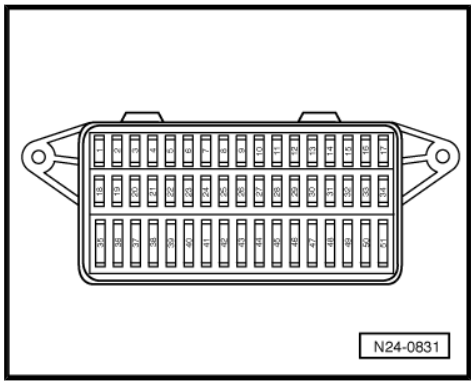

– Pull 2-pin connector off variable intake manifold flap change-over valve -N239- -arrow-.

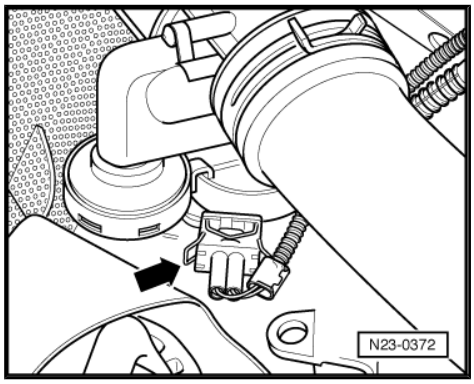

– Measure resistance between change-over valve contacts.

Specification: 25.0…45.0 Ω

If the specification is not achieved:

– Renew inlet connection together with variable intake manifold flap change-over valve -N239- ⇒ page 47 , Removing and installing inlet connection.

– Read fault memory, if necessary, repair any faults and then clear fault memory ⇒ page 7 , Reading and clearing fault memory.

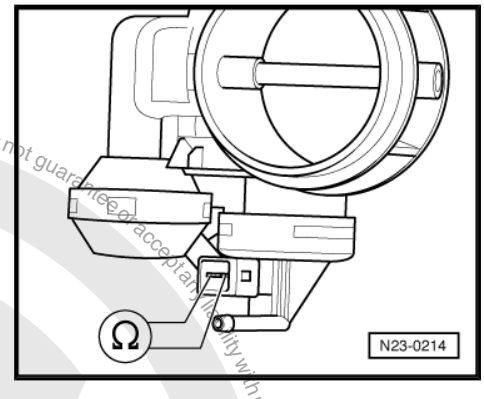

If the specification is attained:

– Set hand multimeter -V.A.G 1526C- or multimeter -V.A.G 1715- to measure voltage and connect to contacts 1 + 2 of disconnected connector for variable intake manifold flap change-over valve -N239- .

– Start engine and run at idling speed.

Specification: approx. battery voltage

– Switch off ignition. The voltage value must fall to 0.0 V after approx. 3 seconds.

If the voltage values do not change as described:

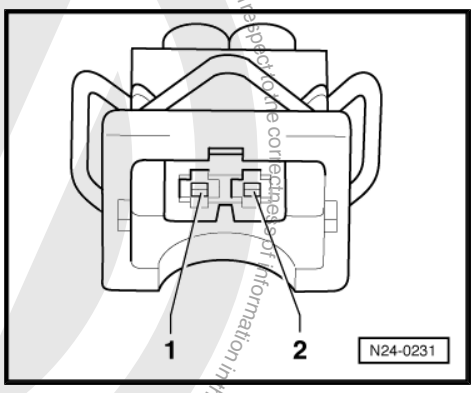

Protected by copyright. Copying for private or commercial purposes, in part or in whole, is not permitted unless authorised by Volkswagen AG. Volkswagen AG does not guarantee or accept any liability with respect to the correctness of information in this document. Copyright by Volkswagen AG.
satelettronica

– Connect adapter cable, 121-pin -V.A.G 1598/31- to control unit wiring harness. The engine control unit remains disconnected.

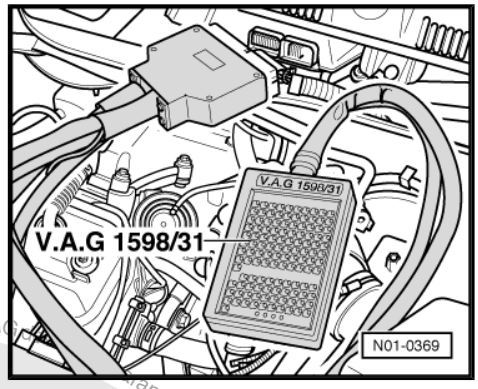

– Check wiring between adapter cable, 121-pin -V.A.G 1598/31- and connector for open circuit referring to current flow diagram. Contact 1 + socket 1 Contact 1 + socket 2 Contact 2 + socket 62.

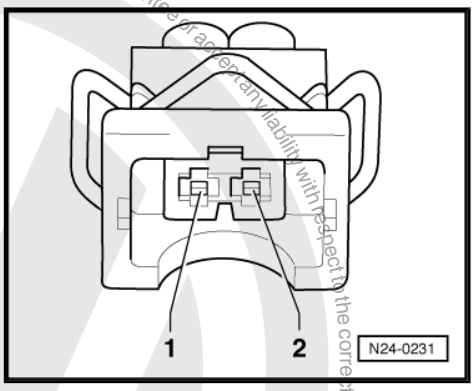

Cable resistance: max. 1.5 Ω.

– Also check wiring for short to one another, short to vehicle earth and short to battery positive.

Specification: ∞ Ω.

If no fault in lines is detected:

– Renew engine control unit ⇒ page 94 .

Protected by copyright. Copying for private or commercial purposes, partly or in whole, is not permitted unless authorised by Volkswagen AG. Volkswagen AG does not guarantee or accept any liability with respect to the correctness of information in this document. Copyright by Volkswagen AG.
satelettronica

3 Checking additional signals

3.1 Checking speed signal

Special tools and workshop equipment required

- Hand multimeter -V.A.G 1526C- or multimeter -V.A.G 1715-
- Fault reader -V.A.G 1551- or vehicle system tester -V.A.G 1552- with diagnosis cable -V.A.G 1551/3-
- Adapter set -V.A.G 1594C-
- Adapter cable, 121-pin -V.A.G 1598/31-
- Current flow diagram

Protected by copyright. Copying for private or commercial purposes, in part or in whole, is not permitted unless authorised by Volkswagen AG. Volkswagen AG does not guarantee or accept any liability with respect to the correctness of information in this document. Copyright by Volkswagen AG.

satelettronica

Test prerequisites

- Fuses must be OK.
- The battery voltage must be at least 11.5 V.
- All electrical consumers, e.g. lights and rear window heating, must be switched off.
- The speedometer must be OK. Checking speedometer ⇒ Electrical system; Rep. Gr. 90 ; Dash panel insert for vehicles 10.99 >

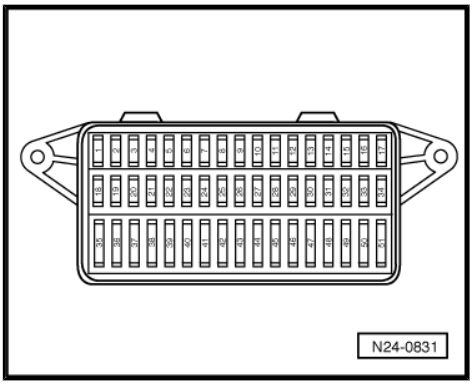

Test procedure

Note

To check the speed signal the vehicle must be driven. To do this a second person is necessary.

WARNING

Secure fault reader -V.A.G 1551- to rear seat and operate from this position.

– Connect fault reader -V.A.G 1551- or vehicle system tester -V.A.G 1552- and select engine electronics control unit with "address word 01". Engine must be idling. (Connecting fault reader -V.A.G 1551- and selecting engine electronics control unit ⇒ page 2).

Indicated on display:

```
Rapid data transfer                HELP
Select function XX
```

– Press keys 0 and 8 for function "Read measured value block" and confirm entry with Q key.

Indicated on display:

```
Read measured value block

Input display group number XXX
```

– Press keys 0, 0 and 6 for "Display group number 6" and confirm entry with Q key.

– Carry out road test with a 2nd person to observe display.

Observe applicable safety precautions during road test ⇒ page 43 .

– Observe display value in display zone 1.

```
Read measured value block 6          ->
    0 km/h     0  0  0    000000    255
```

Specification: Approx. vehicle speed

– Press ↵ key.

– Press keys 0 and 6 for function "End output" and confirm entry with Q key.

– Switch off ignition.

If no speed is indicated:

Protected by copyright. Copying for private, commercial purposes in part or in whole, is not permitted unless authorised by Volkswagen AG. Volkswagen AG does not guarantee or accept any liability with respect to the correctness of information in this document. Copyright by Volkswagen AG.
satelettronica

– Connect adapter cable, 121-pin -V.A.G 1598/31- to control unit wiring harness. The engine control unit remains disconnected.
– Connect hand multimeter -V.A.G 1526C- or multimeter -V.A.G 1715- to measure voltage between sockets 4 + 5 and 5 + 20 of adapter cable, 121-pin -V.A.G 1598/31- .
– Switch on ignition.
– Lift vehicle at front left.
– Rotate front wheel and observe voltage display.

Specification: between 0 and at least 4 volt fluctuating

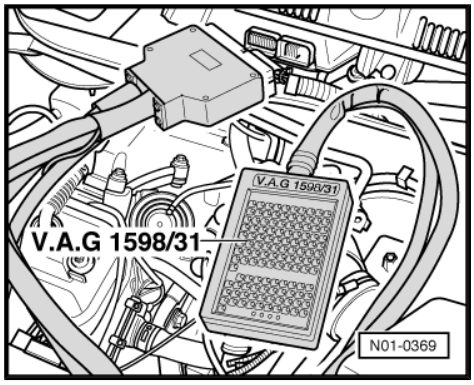

Note

If necessary, hold the front right wheel to prevent it from turning.

If the display does not fluctuate:

– Check line connection from engine control unit connector contact 20 to dash panel insert for open circuit or short-circuit ⇒ Current flow diagrams, Electrical fault finding and Fitting locations.

3.2 Checking signal from brake light switch -F- and brake pedal switch -F47- .

Function

Because the injection system operates with an accelerator pedal sender (potentiometer) which may be defective, the engine is regulated for reasons of safety when the brakes are operated. To do this the control unit requires signals from the brake light switch and also the brake pedal switch. This means that if the brakes are operated when the accelerator pedal is held at a constant position the engine is immediately reduced to idling speed. Incorrectly adjusted switches may lead to unrequired regulating action

Special tools and workshop equipment required

- Hand multimeter -V.A.G 1526C- or multimeter -V.A.G 1715-
- Fault reader -V.A.G 1551- or vehicle system tester -V.A.G 1552- with diagnosis cable -V.A.G 1551/3-
- Adapter set -V.A.G 1594C-
- Adapter cable, 121-pin -V.A.G 1598/31-
- Current flow diagram

Protected by copyright. Copying for private or commercial purposes, in part or in whole, is not permitted unless authorised by Volkswagen AG. Volkswagen AG does not guarantee or accept any liability with respect to the correctness of information in this document. Copyright by Volkswagen AG.
satelettronica

Test prerequisites

- Fuses must be OK.
- The battery voltage must be at least 11.5 V.

Test procedure

– Connect fault reader -V.A.G 1551- or vehicle system tester -V.A.G 1552- and select engine electronics control unit with “address word 01”. The ignition must be switched on for this purpose. (Connecting fault reader -V.A.G 1551- and selecting engine electronics control unit ⇒ page 2).

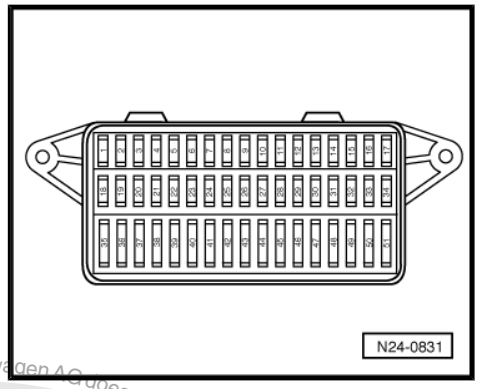

Indicated on display:

```
Rapid data transfer                    HELP
Select function XX
```

– Press keys 0 and 8 for function “Read measured value block” and confirm entry with Q key.

Indicated on display:

```
Read measured value block

Input display group number XXX
```

– Press keys 0, 0 and 6 for “Display group number 6” and confirm entry with Q key.

– Observe display in display zone 2.

Specification: 0 0 0

```
Read measured value block 6          ->
    0 km/h     0  0  0    000000    255
```

♦ Middle display = brake pedal switch -F47- .

♦ Right display = brake light switch -F- .

– Operate brake pedal slowly. Both displays must simultaneously switch from 0 to 1.

Specification: 0 1 1

```
Read measured value block 6
   ->
    0 km/h     0  1  1    000000    255
```

– Release brake pedal slowly into rest position again.

Both displays must change from 1 to 0 again.

```
Read measured value block 6          ->
    0 km/h     0  0  0    000000    255
```

– Press → key.

– Press keys 0 and 6 for function “End output” and confirm entry with Q key.

– Switch off ignition.

If one or both displays do not change:

– Remove cover in footwell (driver side).

– Pull 4-pin connector off brake light switch -F- and brake pedal switch -F47- .

Protected by copyright. Copying for private or commercial purposes, in part or on whole is not permitted unless authorised by Volkswagen AG. Volkswagen AG does not guarantee or accept any liability with respect to the correctness of information in this document. Copyright by Volkswagen AG.
satelettronica

– Measure resistance between switch contacts 1 + 4.

Specification: Brake not depressed: ∞ Ω~(no continuity), brake depressed: Max. 1.5 Ω

– Measure resistance between switch contacts 2 + 3.

Specification: Brake not depressed: Max. 1.5 Ω, brake depressed: ∞ Ω~(no continuity)

If the specifications are not attained:

– Renew brake light switch -F- and brake pedal switch -F47- .

If the specifications are attained:

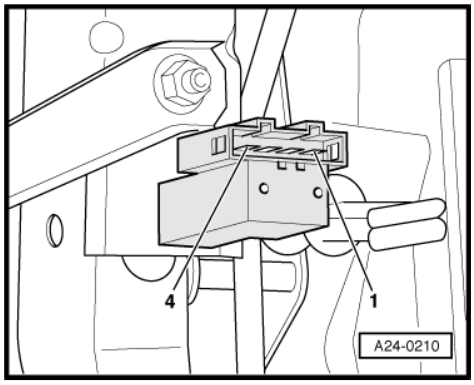

– Connect adapter cable, 121-pin -V.A.G 1598/31- to control unit wiring harness. The engine control unit remains disconnected.

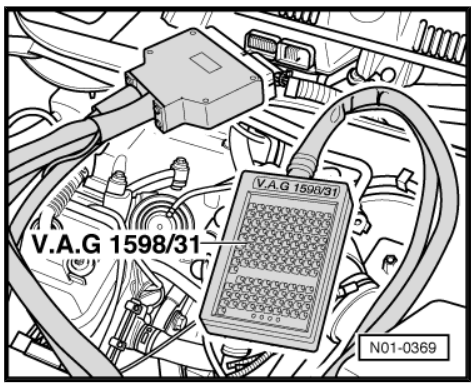

– Check wiring between 121-pin adapter cable -V.A.G 1598/31- and 4-pin connector for open circuit according to current flow diagram. Contact 2 + socket 1 Contact 2 + socket 2 Contact 3 + socket 65 Contact 4 + socket 32.

Cable resistance: max. 1.5 Ω.

– Check the line between 4-pin connector contact 1 and central electrics according to current flow diagram: ⇒ Current flow diagrams, Electrical fault finding and Fitting locations

– Also check wiring for short to one another, short to vehicle earth and short to battery positive.

Specification: ∞ Ω.

If no fault in lines is detected:

– Renew engine control unit ⇒ page 94 .

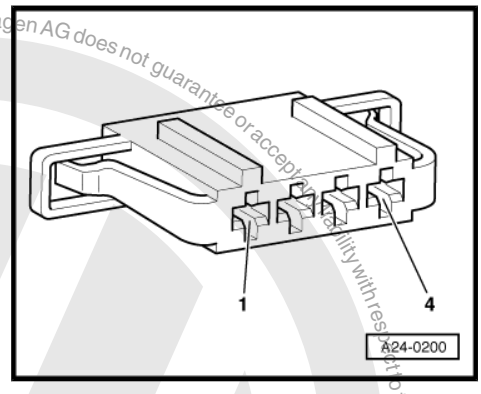

3.3 Checking signal from clutch pedal switch -F36- .

Function

The clutch pedal switch -F36- informs the control unit whether the clutch is engaged or disengaged. This prevents the engine from juddering on disengaging and engaging the clutch.

Special tools and workshop equipment required

- Hand multimeter -V.A.G 1526C- or multimeter -V.A.G 1715-
- Fault reader -V.A.G 1551- or vehicle system tester -V.A.G 1552- with diagnosis cable -V.A.G 1551/3-
- Adapter set -V.A.G 1594C-
- Adapter cable, 121-pin -V.A.G 1598/31-
- Current flow diagram

satelettronica

Test prerequisites

- Fuses must be OK.
- The battery voltage must be at least 11.5 V.

Test procedure

– Connect fault reader -V.A.G 1551- or vehicle system tester -V.A.G 1552- and select engine electronics control unit with “address word 01”. The ignition must be switched on for this purpose. (Connecting fault reader -V.A.G 1551- and selecting engine electronics control unit ⇒ page 2).

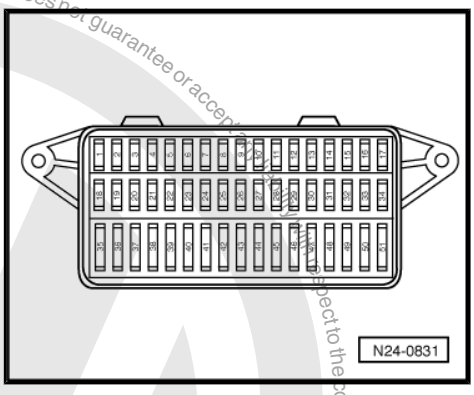

Indicated on display:

```
Rapid data transfer                    HELP
Select function XX
```

– Press keys 0 and 8 for function “Read measured value block” and confirm entry with Q key.

Indicated on display:

```
Read measured value block

Input display group number XXX
```

– Press keys 0, 0 and 6 for “Display group number 6” and confirm entry with Q key.

– Observe display in display zone 2.

Specification: 0 0 0

```
Read measured value block 6          ->
    0 km/h     0  0  0    000000    255
```

♦ Left display = clutch pedal switch -F36-

– Operate clutch pedal. The left display must change to 1.

```
Read measured value block 6
   ->
    0 km/h     1  0  0    000000    255
```

– Release clutch pedal slowly back rest position.

Left display must change from 1 to 0 again.

```
Read measured value block 6          ->
    0 km/h     0  0  0    000000    255
```

– Press ↵ key.

– Press keys 0 and 6 for function “End output” and confirm entry with Q key.

– Switch off ignition.

If the display does not change:

– Remove cover in footwell (driver side).

– Pull 2-pin connector off clutch pedal switch -F36- .

Protected by copyright. Copying for private or commercial purposes, in part or in whole, is not permitted unless authorised by Volkswagen AG. Volkswagen AG does not guarantee or accept any liability with respect to the correctness of information in this document. Copyright by Volkswagen AG.
satelettronica

– Measure resistance at switch contacts.

Specification: Clutch not depressed: Max. 1.5 Ω, clutch depressed: ∞ Ω~(no continuity)

If the specifications are not attained:

– Renew clutch pedal switch -F36- .

If the specifications are attained:

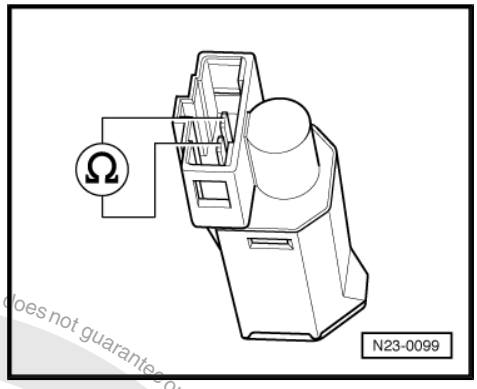

– Connect adapter cable, 121-pin -V.A.G 1598/31- to control unit wiring harness. The engine control unit remains disconnected.

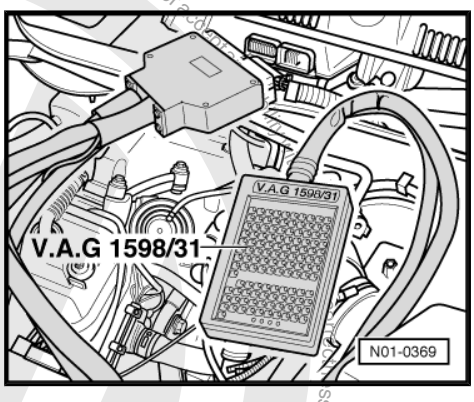

– Check wiring between adapter cable, 121-pin -V.A.G 1598/31- and connector for open circuit referring to current flow diagram. Contact 1 + socket 1 Contact 1 + socket 2 Contact 2 + socket 66.

Cable resistance: max. 1.5 Ω.

– Also check wiring for short to one another, short to vehicle earth and short to battery positive.

Specification: ∞ Ω.

If no fault in lines is detected:

– Renew engine control unit ⇒ page 94 .

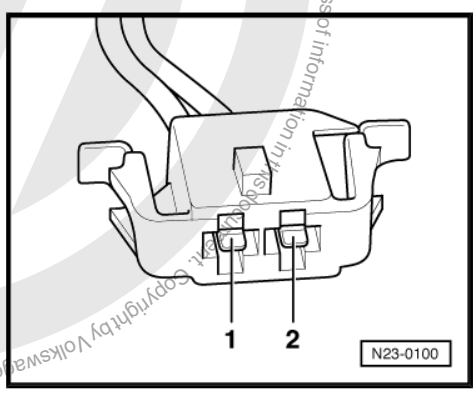

3.4 Checking speed signal

The engine speed sender -G28- signal cannot be used further in its direct form; therefore it is processed by the engine control unit for further consumers. This signal is required for the rev. counter in the dash panel insert, etc.

Special tools and workshop equipment required

- Hand multimeter -V.A.G 1526C- or multimeter -V.A.G 1715-
- Adapter set -V.A.G 1594C-
- Adapter cable, 121-pin -V.A.G 1598/31-
- Current flow diagram

Protected by copyright. Copying for private or commercial purposes, in part or in whole, is not permitted unless authorised by Volkswagen AG. Volkswagen AG does not guarantee or accept any liability with respect to the correctness of information in this document. Copyright by Volkswagen AG.
satelettronica

Test procedure

– Connect adapter cable, 121-pin -V.A.G 1598/31- to control unit wiring harness.

– Check for open circuit in line connection between dash panel insert and contact 27 of adapter cable, 121-pin -V.A.G 1598/31- according to current flow diagram ⇒ Current flow diagrams, Electrical fault finding and Fitting locations.

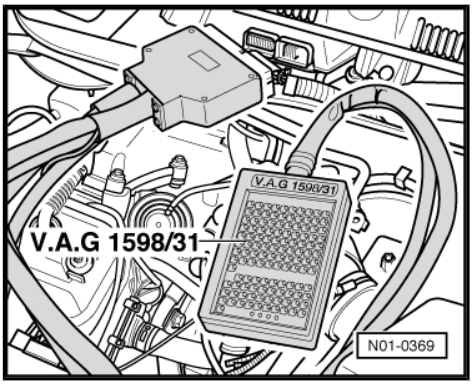

3.5 Checking data bus

Function

The control units capable of data bus are connected together via two data bus wires twisted together (CAN_High and CAN_Low) and exchange information (messages). Information not available in the data bus will be recognised as a fault by the engine control unit as well as other CAN data bus control units.

The CAN data bus requires a matching resistor of 66 Ω to function fault-free. This central matching resistor is located in the engine control unit.

Further information: ⇒ Self-study programme No. 186 ;"The CAN data bus" .

Special tools and workshop equipment required

♦ Hand multimeter -V.A.G 1526C- or multimeter -V.A.G 1715-

♦ Adapter set -V.A.G 1594C-

♦ Adapter cable, 121-pin -V.A.G 1598/31-

♦ Current flow diagram

Test prerequisite

• A fault has been recognised by the CAN data bus self-diagnosis.

Test procedure

– Release connector from engine control unit and pull off.

– Connect adapter cable, 121-pin -V.A.G 1598/31- to engine control unit. The control unit wiring harness is not connected by this action.

– Check central matching resistor in engine control unit.

– To do this, perform resistance measurement between sockets 6 + 7 of adapter cable, 121-pin -V.A.G 1598/31- .

Specification: 60.0…72.0 Ω

If the resistance measurement is outside the specified range:

– Renew engine control unit ⇒ page 94 .

If the resistance value is within the specified range:

– Eliminate the fault in the lines and in other data bus components according to current flow diagram: ⇒ Current flow diagrams, Electrical fault finding and Fitting locations

Protected by copyright. Copyright by Volkswagen AG. Volkswagen AG does not guarantee or accept any liability with respect to the correctness of information in this document. Copyright by Volkswagen AG.
Reproduction for private or commercial purposes in part or in whole, is not permitted unless authorised by Volkswagen AG.
satelettronica

4 Renewing, coding and matching engine control unit

4.1 Renewing engine control unit

Special tools and workshop equipment required

- Fault reader -V.A.G 1551- with diagnosis cable -V.A.G 1551/3-

Removing

- First print out the control unit identification and thereby the previous control unit coding as follows:
- Connect fault reader -V.A.G 1551- or vehicle system tester -V.A.G 1552- and select engine electronics control unit with “address word 01” ⇒ page 2 ; connect fault reader -V.A.G 1551- and select engine electronics control unit.

The fault reader -V.A.G 1551- display will show the control unit identification, e.g.:

```
038906012AS  1.7l  R4  EDC  00SG 2536 ->
Coding 00002                 WSC 0000
```

- Print out the control unit identification by pressing the fault reader Print key.
- Press ↵ key.
- Press keys 0 and 6 for function “End output” and confirm entry with Q key.

Indicated on display:

```
Rapid data transfer                HELP
Select function XX
```

- Switch off ignition.
- Remove windscreen wiper arms and the cover for plenum chamber ⇒ Electrical system; Rep. Gr. 92 ; Removing and installing windscreen wiper system, vehicles 10.99 > .
- Release connector from control unit and pull off.
- Unclip the control unit from the retaining frame -arrows-.

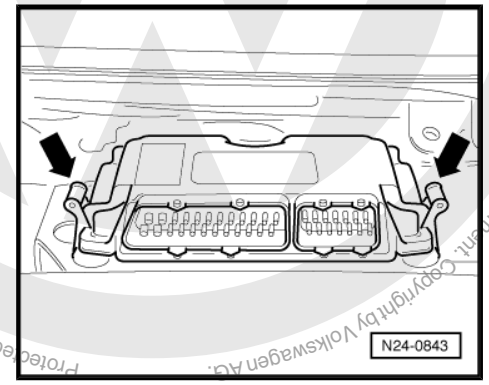

Installing

- Insert new control unit into retaining frame.
- Install control unit connector and lock.
- Check previous coding and code new control unit ⇒ page 94 .
- Adapt new control unit to electronic immobilizer ⇒ page 95 .
- Read fault memory, if necessary, repair any faults and then clear fault memory ⇒ page 7 , Reading and clearing fault memory.

4.2 Coding engine control unit

If the appropriate code for the vehicle is not displayed or if the control unit has been renewed, the control unit must be coded as follows.

Special tools and workshop equipment required

- Fault reader -V.A.G 1551- or vehicle system tester -V.A.G 1552- with diagnosis cable -V.A.G 1551/3-

Protected by copyright. Copying for private or commercial purposes, in part or in whole, is not permitted unless authorised by Volkswagen AG. Volkswagen AG does not guarantee or accept any liability with respect to the correctness of information in this document. Copyright by Volkswagen AG.
satelettronica

Procedure

– Connect fault reader -V.A.G 1551- or vehicle system tester -V.A.G 1552- and select engine electronics control unit with “address word 01”. When doing this the ignition must be switched on. (Connecting fault reader -V.A.G 1551- and selecting engine electronics control unit ⇒ page 2).

– Press [→] key.

Indicated on display:

```
Rapid data transfer                    HELP
Select function XX
```

– Press keys [0] and [7] for function “Code control unit” and confirm entry with [Q] key.

Indicated on display:

```
Code control unit
Enter code number XXXXX                (0
```

– Enter appropriate code number for vehicle and confirm with [Q] key.

Code number	For vehicles
00002	With crash shut-off
00005	Without crash shut-off

The fault reader -V.A.G 1551- display will show the control unit identification, e.g.:

```
038906012AS  1.7l  R4  EDC  00SG 2536 ->
Coding 00002                 WSC 0000
```

– Switch ignition off and then on again.

Note

The coding entered will be activated by switching the ignition off and then on again. If after entering the valid code the ignition is not switched off and on again, the fault “Control unit incorrectly coded” cannot be erased.

– Read fault memory, if necessary, repair any faults and then clear fault memory ⇒ page 7 , Reading and clearing fault memory.

4.3 Adapting engine control unit to electronic immobilizer

Special tools and workshop equipment required

♦ Fault reader -V.A.G 1551- or vehicle system tester -V.A.G 1552- with diagnosis cable -V.A.G 1551/3-

Test prerequisite

• Authorized vehicle key required.

Protected by copyright. Copying for private or commercial purposes, in part or in whole, is not permitted unless authorised by Volkswagen AG. Volkswagen AG does not guarantee or accept any liability with respect to the correctness of information in this document. Copyright by Volkswagen AG.
satelettronica

Procedure

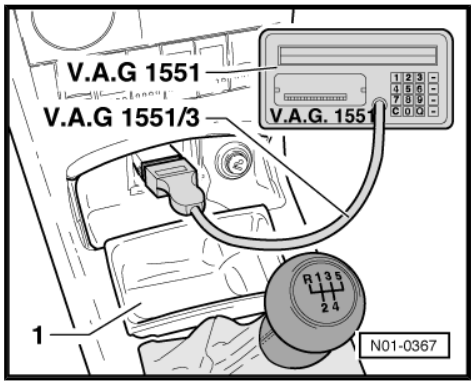

- Remove ashtray -1-.
- Connect fault reader -V.A.G 1551- or vehicle system tester -V.A.G 1552- with diagnosis cable -V.A.G 1551/3- .
- Switch on ignition.
- Operate fault reader -V.A.G 1551- or vehicle system tester -V.A.G 1552- taking into account the information on the display:
- Press key 1 for “Rapid data transfer”.
- Press keys 2 and 5 for address word “immobilizer” and confirm the input with Q key.
- Press → key.

Indicated on display:

```
Rapid data transfer                HELP
Select function XX
```

- Press keys 1 and 0 for the function “Adaptation” and confirm input with the Q key.

Indicated on display:

```
Adaption
Feed in channel number XX
```

- Press key 0 twice for “Channel number 0” and confirm entry with Q key.

Indicated on display:

```
Adaption                              Q
Erase learnt values?
```

- Confirm entry with Q key.

Indicated on display:

```
Adaption                             ->
Learnt values have been cleared
```

- Finish adaption by pressing → key.
- Press keys 0 and 6 for function “End output” and confirm entry with Q key.
- Switch off ignition.

Note

The identity of the engine control unit is read into the immobilizer control unit when next switching the ignition on.

Protected by copyright. Copying for private or commercial purposes, in part or in whole, is not permitted unless authorised by Volkswagen AG. Volkswagen AG does not guarantee or accept any liability with respect to the correctness of information in this document. Copyright by Volkswagen AG.
satelettronica

28 – Glow plug system

1 Checking glow plug system

Special tools and workshop equipment required

- Hand multimeter -V.A.G 1526C-

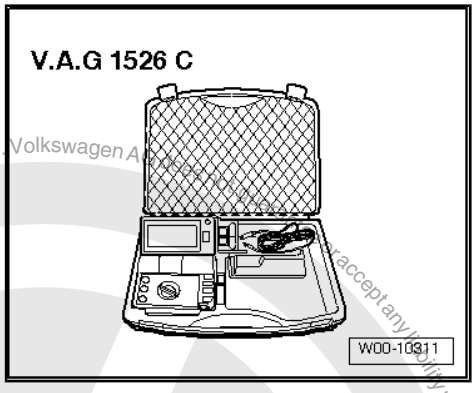

- Adapter set -V.A.G 1594C-

Test prerequisites

- Fuse box/battery glow plug strip fuse OK
- The battery voltage must be at least 11.5 V.
- All electrical consumers, e.g. lights and rear window heating, must be switched off.
- Diesel direct injection system control unit -J248- is OK.

Protected by copyright. Copying for private or commercial purposes, in part or in whole, is not permitted unless authorised by Volkswagen AG. Volkswagen AG does not accept any liability with respect to the correctness of information in this document. Copyright by Volkswagen AG.
satelettronica

Test procedure

– Pull 4-pin connector off coolant temperature sender -G62- with coolant temperature gauge sender -G2- -arrow-.

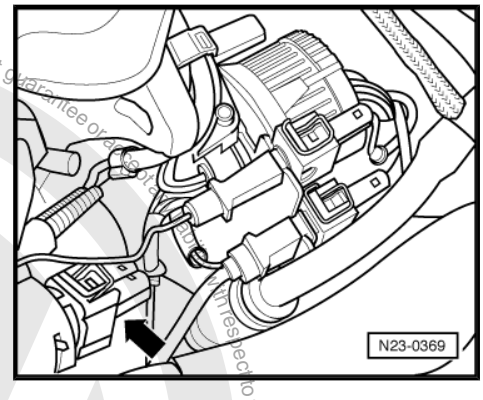

Note

Pulling the connector off sender, simulates engine condition "cold" and when switching the ignition on the relevant glow period is carried out.

– Pull glow plug connectors from glow plugs.

– Connect hand multimeter -V.A.G 1526C- to measure voltage between glow plug connector and vehicle earth.

– Switch on ignition. Approx. battery voltage must be displayed for roughly 20 seconds.

– If no voltage is present: ⇒ Current flow diagrams, Electrical fault finding and Fitting locations

– Read fault memory, if necessary, repair any faults and then clear fault memory ⇒ page 7 , Reading and clearing fault memory.

1.1 Checking glow plugs

Special tools and workshop equipment required

♦ U/J extension and socket, 10 mm -3220-

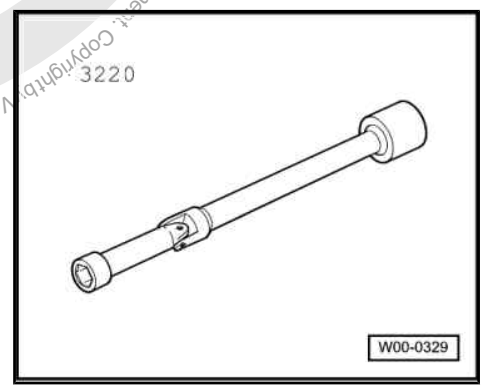

♦ Adapter set -V.A.G 1594C-

Protected by copyright. Copyright by Volkswagen AG.
Copyright by Volkswagen AG does not guarantee or assume any liability with respect to the correctness of information in this document. Copying for private or commercial purposes, in part or in whole, is not permitted unless authorised by Volkswagen AG.
satelettronica

♦ Voltage tester -V.A.G 1527B-

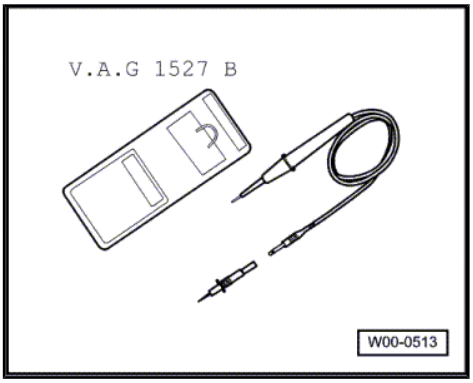

Test prerequisites

- Fuse box/battery glow plug strip fuse OK
- The battery voltage must be at least 11.5 V.
- All electrical consumers, e.g. lights and rear window heating, must be switched off.

Test procedure

– Pull glow plug connectors from glow plugs.

– Connect voltage tester -V.A.G 1527B- cable to battery positive (+), using clips from auxiliary measuring set -V.A.G 1594C- .

– Place test probe of voltage tester -V.A.G 1527B- on each glow plug one after the other.

LED lights up: Glow plug OK.

If LED does not light up: fit a new glow plug

– Remove and install glow plugs with U/J extension and socket, 10 mm -3220- .

Specified torque: 15 Nm.

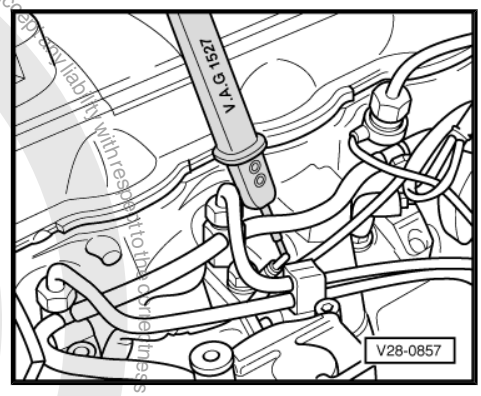

Protected by copyright. Copying for private or commercial purposes, in part or in whole, is not permitted unless authorised by Volkswagen AG. Volkswagen AG does not guarantee or accept any liability with respect to the correctness of information in this document. Copyright by Volkswagen AG.
satelettronica